ROVV®

High Performance Butterfly Valves

高性能蝶阀

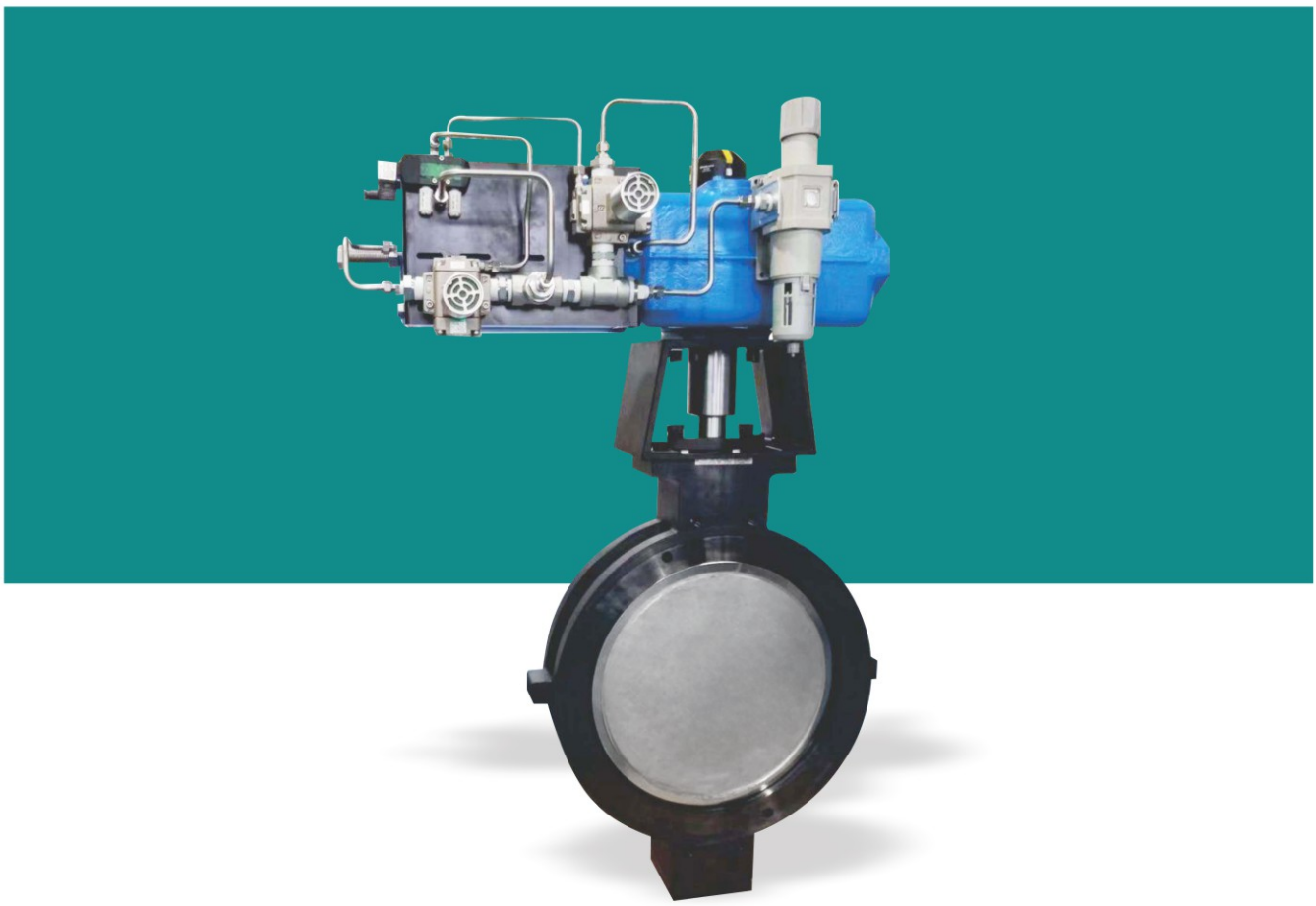

上海罗杰斯阀门有限公司

SHANGHAI ROGERS VALVE CO., LTD.

企业简介
Company Profile

一站式阀门解决方案

上海罗杰斯阀门有限公司，坐落于中国经济贸易中心上海市，是一家集工业阀门的研发、制造、检测、销售、服务于一体的科技生产服务型企业。公司拥有球阀、蝶阀、闸阀、截止阀、止回阀、调节阀、水力阀等多个系列近千个品种。产品广泛应用于石油化工、电力制药、消防供暖、市政建筑、排水供水、天然气、制氧制氢等行业。

上海罗杰斯超高性能双偏心蝶阀，高性能球阀及各种智能型调节控制阀门，具有卓越的技术性能和独特的密封结构。超高性能双偏心蝶阀，具有独特的密封结构，动静密封均采用高分子材料聚四氟乙烯（PTFE），阀座采用G型弹性密封结构，具有抗疲劳、抗老化、自润滑、自动补偿、双向零泄露等特点，从而达到高速度、高频率、高寿命等良好效果；在空分制氧的变压吸附工艺的设备上使用并测试，其寿命能达到100~300万次。高性能球阀，具有独特的弹性及自动补偿的密封结构、密封性能好、扭矩轻、寿命长等特点，并且有防火、防静电等功能。

创新智造零缺陷管控

坚持科技创新，提供零缺陷的产品与服务是上海罗杰斯的目标。上海罗杰斯应用先进自动化控制装置、加工中心及数控机床等设备，采用无损检测、光谱分析、三维测量仪及阀门综合性能测试检验等，保证产品质量及精度的高度统一、产品使用寿命的长效稳定。

目前上海罗杰斯阀门拥有ISO9001、ISO14001、ISO45001、SA 8000、TS特种设备生产许可证、美国API-6D认证、俄罗斯EAC认证、SIL阀门安全等级证书、API607防火认证、微泄漏认证、饮用水卫生许可证批件、碳中和承诺示范企业、节水产品认证等证书。

与客户携手成长共赢

上海罗杰斯持续关注客户需求，立足严苛工况阀门技术研究，采用国际先进的设备与管理模式，不断优化服务体系，满足国内外客户对于品质、服务与供货周期的需求。

上海罗杰斯积极推进全球销售网络的建设，秉持互利共赢的理念，以“全球化思维、本土化经营”的运作方式，积极与全球合作伙伴开展友好合作，制定因地制宜的营销策略，为客户提供高附加值的流体控制集成解决方案，与客户携手成长共赢。

One-Stop Valve Solution

Shanghai Rogers Valve Co., Ltd. is a technology-oriented production service enterprise that integrates the research and development, manufacturing, testing, sales, and service of industrial valves.

ROVV boasts a variety of series including ball valves, butterfly valves, gate valves, globe valves, check valves, control valves, and hydraulic valves, with nearly a thousand types. Our products are widely applied in industries such as petrochemical, power, pharmaceutical, fire protection and heating, municipal construction, water supply and drainage, natural gas, and oxygen and hydrogen production.

Innovative Manufacturing Zero Defect Control

ROVV employs advanced automation control devices, machining centers, and CNC machines, and uses non-destructive testing, spectral analysis, three-dimensional measuring instruments, and comprehensive valve performance testing to ensure the high uniformity of product quality and precision, as well as the long-term stability of product service life.

Currently, ROVV holds certifications including ISO9001, ISO14001, ISO45001, SA8000, TS Special Equipment Production Permit, American API-6D certification, Russian EAC certification, SIL valve safety level certificate, API607 fire resistance certification, micro-leakage certification, drinking water health permit, carbon neutrality commitment demonstration enterprise, and water-saving product certification.

Growing and Winning Together with Customers

By continuously focusing on customer needs and basing our research on valve technology for harsh working conditions, we provide customers with highly valuable integrated fluid control solutions.

ROVV actively promotes the construction of a global sales network and is ready to provide solutions in various countries and fields.

ROVV® 上海罗杰斯
SHANGHAI ROGERS

荣誉资质

Honor and Qualification

上海罗杰斯始终秉持“专精一艺，必有回响”的理念，深耕细作，致力于打造高品质的阀门产品。经过多年的不懈努力，上海罗杰斯在行业内树立了良好的口碑，荣获多项资质证书，得到来自各方的专业机构、行业协会和客户伙伴的认可。

ROVV has always adhered to the philosophy of "specializing in one craft, there will be a resonance," deeply cultivating and dedicated to creating high-quality valve products. After years of unwavering efforts, ROVV has established a positive reputation in the industry, been awarded multiple qualification certificates, and received recognition from various professional organizations, industry associations, and customer partners.

创新智造，行且坚毅

Innovative Manufacturing, Steadfast and Resilient

全流程智能控制：应用先进数控机床、自动化装配系统以及高效的生产管理软件，实现从原材料加工到成品组装的全流程智能化控制。

零缺陷过程管控：采用先进的制造设备、科学的管理制度和尖端的检测设备，确保为客户提供零缺陷的阀门产品。

创新驱动高标准：始终坚持科技创新，不断提升阀门产品的技术含量和附加值，为客户提供高标准定制化的解决方案。

Full-process Intelligent Control: Utilizing advanced CNC machines, automated assembly systems, and efficient production management software to achieve full-process intelligent control from raw material processing to finished product assembly.Zero Defect Process Management: Employing advanced manufacturing equipment, scientific management systems, and cutting-edge inspection devices to ensure the provision of zero-defect valve products to our clients.Innovation-driven High Standards: Consistently adhering to technological innovation, continuously enhancing the technical content and added value of valve products, and providing customers with high-standard, customized solutions.

ROVV® 上海罗杰斯
SHANGHAI ROGERS

科技创新是持续发展的强大动力！

Scientific and technological innovation is a powerful driving force for the sustainable development of the company

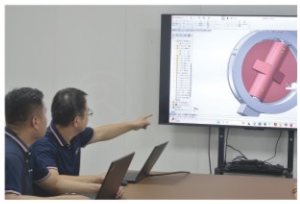

ROVV® 上海罗杰斯
SHANGHAI ROGERS

Contents
目录

成套系统解决方案
Whole-set System Solution

D800W系列工业生产自动化蝶阀 D800W Series Pneumatic Butterfly Valve	D800W系列气动蝶阀 D800W Series Pneumatic Butterfly Valve	L90 焊接式蝶阀 L90 Butt Welded Butterfly Valve	D800G系列电动蝶阀 D800G Series Electrical Butterfly Valve
			
• 双偏心设计使蝶板与密封面快速分离，减少摩擦，高频率高使用寿命 • 带自动补偿设计的G型阀座保持可靠密封 • 无油自润滑轴套 • 独特的动载补偿密封设计填料，杜绝了阀门外漏 • 防飞出设计防止阀杆被破坏吹出 • 防静电设计 • Double eccentric design makes the butterfly plate and the sealing surface separate quickly, reducing friction, high frequency and long service life • G-type valve seat with automatic compensation design keeps reliable sealing • Oil-free self-lubricating bushing • Unique packing for dynamic load compensation seal design eliminates the valve Leakage • Anti-flying design prevents the valve stem from being damaged and blown out • Anti-static design	• 双偏心设计使蝶板与密封面快速分离，减少摩擦，高频率高使用寿命 • 带自动补偿设计的G型阀座保持可靠密封 • 无油自润滑轴套 • 独特的动载补偿密封设计填料，杜绝了阀门外漏 • 防飞出设计防止阀杆被破坏吹出 • 防静电设计 • Double eccentric design makes the butterfly plate and the sealing surface separate quickly, reducing friction, high frequency and long service life • G-type valve seat with automatic compensation design keeps reliable sealing • Oil-free self-lubricating bushing • Unique packing for dynamic load compensation seal design eliminates the valve Leakage • Anti-flying design prevents the valve stem from being damaged and blown out • Anti-static design	• 双流向均可承压、实现无流向限制的安装方式 • 金属对金属扭矩密封 • 可更换的阀座和密封环设计 • 阀座采用全金属锻造而成,并在密封面喷焊司太立合金 • 抗冲刷、寿命长、耐磨损 • Both flow directions can bear pressure and realize installation without flow direction restriction the way • Metal to metal torque seal • Replaceable valve seat and seal ring design • The valve seat is made of all metal forging,and sprayed on the sealing surface Welding Stellite • Erosion resistance, long life,wear resistance	• 双偏心设计使蝶板与密封面快速分离，减少摩擦，高频率高使用寿命 • 带自动补偿设计的G型阀座保持可靠密封 • 无油自润滑轴套 • 独特的动载补偿密封设计填料，杜绝了阀门外漏 • 防飞出设计防止阀杆被破坏吹出 • 防静电设计 • Double eccentric design makes the butterfly plate and the sealing surface separate quickly, reducing friction, high frequency and long service life • G-type valve seat with automatic compensation design keeps reliable sealing • Oil-free self-lubricating bushing • Unique packing for dynamic load compensation seal design eliminates the valve Leakage • Anti-flying design prevents the valve stem from being damaged and blown out • Anti-static design
尺寸（mm）：50-1200 温度（℃）：-50-250 压力（Mpa）：0.6、1.0、1.6、150LB、5K、10K、16K 连接方式：对夹GB、ANSI、JIS、DIN、EN Size (mm): 50-1200 Temperature (℃): -50-250 Pressure (Mpa): 0.6, 1.0, 1.6, 150LB, 5K, 10K, 16K Connection mode: Wafer GB, ANSI, JIS, DIN, EN	尺寸（mm）：50-2000 温度（℃）：-50-250 压力（Mpa）：1.6、2.5、4.0、300LB、20K、30K 连接方式：对夹GB、ANSI、JIS、DIN、EN Size (mm): 50-2000 Temperature (℃): -50-250 Pressure (Mpa): 1.6, 2.5, 4.0, 300LB, 20K, 30K Connection mode: Wafer GB, ANSI, JIS, DIN, EN	尺寸（mm）：50-2000 温度（℃）：-196-425 压力（Mpa）：1.0、1.6、2.0、150LB、300LB 连接方式：对焊、套焊GB、ANSI、JIS、DIN Size (mm):50-2000 Temperature (℃):-196-425 Pressure (Mpa): 1.0, 1.6, 2.0, 150LB, 300LB Connection mode: butt welding, sleeve welding GB, ANSI, JIS, DIN	尺寸（mm）：50-2000 温度（℃）：-50-250 压力（Mpa）：0.6、1.0、1.6、2.0、150LB、5K、10K、16K 连接方式：对夹GB、ANSI、JIS、DIN、EN Size (mm): 50-2000 Temperature (℃): -50-250 Pressure (Mpa): 0.6, 1.0, 1.6, 2.0, 150LB, 5K, 10K, 16K Connection mode: Wafer GB, ANSI, JIS, DIN, EN
阀体/蝶板：CF8、CF8M、CF3M、CF3、2205、2507、Monel、HC、TA2 阀杆：17-4PH、F316、F304、F51 阀座：聚四氟乙烯密封圈 PTFE、RPTFE、PPL、TFM、UHMW-PE Valve body/butterfly plate: CF8, CF8M, CF3M, CF3, 2205, 2507, Monel, HC, TA2 Stem: 17-4PH, F316, F304, F51 Valve seat: Teflon sealing ring PTFE, RPTFE, PPL, TFM, UHMW-PE	阀体/蝶板：球铁、碳钢、锻钢、不锈钢、合金钢、铝青铜 阀杆：17-4PH、不锈钢、合金钢 阀座：聚四氟乙烯密封PTFE、RPTFE、PPL、TFM、UHMWPE Valve body/ butterfly plate: ductile iron, carbon steel, forged steel, stainless steel, Alloy steel, aluminum bronze Stem: 17-4PH, stainless steel, alloy steel Valve seat: Teflon sealed PTFE, RPTFE, PPL, TFM, UHMWPE	阀体/蝶板：锻钢、不锈钢、合金钢 阀杆：17-4PH、不锈钢、合金钢 阀座：SUS304 +WC、SUS 316+WC、SUS304 +STL、SUS+STL Valve body/butterfly plate: forged steel, stainless steel, alloy steel Stem: 17-4PH, stainless steel, alloy steel Valve seat: SUS304+WC, SUS316+WC, SUS304 +STL, SUS+STL	阀体/蝶板：球铁、碳钢、锻钢、不锈钢、合金钢、铝青铜、Monel、HC、TA2 阀杆：17-4PH、不锈钢、合金钢 阀座：聚四氟乙烯密封 PTFE、RPTFE、PPL、TFM、UHMW-PE Valve body/butterfly plate: ductile iron, carbon steel, forged steel, stainless steel, Alloy steel, aluminum bronze, Monel, HC, TA2 Stem: 17-4PH, stainless steel, alloy steel Valve seat: Teflon sealed PTFE, RPTFE, PPL, TFM, UHMW-PE
适用于：纯水、空调冷温水、海水、水、福尔马林溶液、有机溶剂、空气、氧气、废气、氮气、焦化气、城市气体、工业生产自动化等行业 Applicable to: pure water, air-conditioning cold and warm water, sea water, water, formalin solution, organic solvent, air, oxygen, exhaust gas, nitrogen, coking gas, city gas, and other automation production industries.	适用于：纯水、空调冷温水、海水、水、福尔马林溶液、有机溶剂、空气、氧气、废气、氮气、焦化气、城市气体、工业生产自动化等行业 Applicable to: pure water, air-conditioning cold and warm water, sea water, water, formalin solution, organic solvent, air, oxygen, exhaust gas, nitrogen, coking gas, city gas, and other automation production industries.	适用于：橡胶和聚四氟乙烯所无法控制的高温流体。可以替代闸阀、球阀使用。水蒸汽、空气、燃气、废气、亚硫酸气体、氮气。主要用于供暖、低压蒸汽等工况 Applicable to: rubber and PTFE can not be controlled High temperature fluid. It can be used instead of gate valve and ball valve. water Steam, air, gas, exhaust gas, sulfurous acid gas, Nitrogen. Mainly used for heating, low pressure steam and other working conditions.	适用于：纯水、空调冷温水、海水、水、福尔马林溶液、有机溶剂、空气、氧气、废气、氮气、焦化气、城市气体、工业生产自动化等行业 Applicable to: pure water, air-conditioning cold and warm water, sea water, water, formalin solution, organic solvent, air, oxygen, exhaust gas, nitrogen, coking gas, city gas, and other automation production industries.

以上资料仅供参考，具体参数以罗杰斯技术部规格书为标准

成套系统解决方案
Whole-set System Solution

D800W系列电液联动蝶阀 D800W Series Electro-hydraulic Butterfly Valve	D800D系列气动高频蝶阀 D800D Series Pneumatic high frequency Butterfly Valve	DBGA8150/816-CF衬氟蝶阀 DBGA8150/816-CF Fluorine-lined Butterfly Valve	D800W系列手自一体式蝶阀 D800W Series Automation with manual Butterfly Valve
			
• 双偏心设计使蝶板与密封面快速分离，减少摩擦，高频率高使用寿命 • 带自动补偿设计的G型阀座保持可靠密封 • 无油自润滑轴套 • 独特的动载补偿密封设计填料，杜绝了阀门外漏 • 防飞出设计防止阀杆被破坏吹出 • 防静电设计 • Double eccentric design makes the butterfly plate and the sealing surface separate quickly, reducing friction, high frequency and long service life • G-type valve seat with automatic compensation design keeps reliable sealing • Oil-free self-lubricating bushing • Unique packing for dynamic load compensation seal design eliminates the valve Leakage • Anti-flying design prevents the valve stem from being damaged and blown out • Anti-static design	• 双偏心设计使蝶板与密封面快速分离，减少摩擦，高频率高使用寿命 • 带自动补偿设计的G型阀座保持可靠密封 • 无油自润滑轴套 • 独特的动载补偿密封设计填料，杜绝了阀门外漏 • 防飞出设计防止阀杆被破坏吹出 • 防静电设计 • Double eccentric design makes the butterfly plate and the sealing surface separate quickly, reducing friction, high frequency and long service life • G-type valve seat with automatic compensation design keeps reliable sealing • Oil-free self-lubricating bushing • Unique packing for dynamic load compensation seal design eliminates the valve Leakage • Anti-flying design prevents the valve stem from being damaged and blown out • Anti-static design	• 标准的ISO5211安装平台设计 • 中线衬PTFE PFA • 耐腐蚀，高性能 • 密封性能好，适用寿命长 • Standard ISO5211 installation platform design • Center line lining PTFE PFA • Corrosion resistance, high performance • Good sealing performance, long service life	• 双偏心设计使蝶板与密封面快速分离，减少摩擦，高频率高使用寿命 • 带自动补偿设计的G型阀座保持可靠密封 • 无油自润滑轴套 • 独特的动载补偿密封设计填料，杜绝了阀门外漏 • 防飞出设计防止阀杆被破坏吹出 • 防静电设计 • Double eccentric design makes the butterfly plate and the sealing surface separate quickly, reducing friction, high frequency and long service life • G-type valve seat with automatic compensation design keeps reliable sealing • Oil-free self-lubricating bushing • Unique packing for dynamic load compensation seal design eliminates the valve Leakage • Anti-flying design prevents the valve stem from being damaged and blown out • Anti-static design
尺寸 (mm)：50-2000 温度 (℃)：-50-250 压力 (Mpa): 0.6、1.0、1.6、2.0. 150LB、5K、10K、16K. 连接方式：对夹GB、ANSI、JIS、 DIN、EN Size (mm): 50-2000 Temperature (℃): -50-250 Pressure (Mpa): 0.6, 1.0, 1.6, 2.0, 150LB, 5K, 10K, 16K. Connection mode: Wafer GB, ANSI, JIS, DIN, EN	尺寸 (mm)：50-2000 温度 (℃)：-50-250 压力 (Mpa): 0.6、1.0、1.6、2.0、 150LB、5K、10K、16K. 连接方式：对夹GB、ANSI、JIS、 DIN、EN Size (mm): 50-2000 Temperature (℃): -50-250 Pressure (Mpa): 0.6, 1.0, 1.6, 2.0, 150LB, 5K, 10K, 16K. Connection mode: Wafer GB, ANSI, JIS, DIN, EN	尺寸 (mm)：40-500 温度 (℃)：-20-150 压力 (Mpa)：1.0、1.6、150LB、10K 连接方式：对夹式,法兰式GB、ANSI、JIS、DIN、EN Size (mm): 40-500 Temperature(℃): -20-150 Pressure (Mpa): 1.0, 1.6, 150LB, 10K Connection mode: wafer type, flange type GB, ANSI, JIS, DIN, EN	尺寸 (mm)：50-2000 温度 (℃)：-50-250 压力 (Mpa)：0.6、1.0、1.6、2.0、 150LB、5K、10K、16K. 连接方式：对夹GB、ANSI、JIS、 DIN、EN Size (mm): 50-2000 Temperature (℃): -50-250 Pressure (Mpa): 0.6, 1.0, 1.6, 2.0, 150LB, 5K, 10K, 16K. Connection mode: Wafer GB, ANSI, JIS, DIN, EN
阀体/蝶板：球铁、碳钢、锻钢、不锈钢、合金钢、铝青铜、Monel、HC、TA2 阀杆：17-4PH、不锈钢、合金钢 阀座：聚四氟乙烯密封 PTFE、RPTFE、PPL、TFM、UHMW-PE Valve body/butterfly plate: ductile iron, carbon steel, forged steel, stainless steel, Alloy steel, aluminum bronze, Monel,HC, TA2 Stem: 17-4PH, stainless steel, alloy steel Valve seat: Teflon sealed PTFE, RPTFE, PPL, TFM, UHMW-PE	阀体/蝶板：球铁、碳钢、锻钢、不锈钢、合金钢、铝青铜、Monel、HC、TA2 阀杆：17-4PH、不锈钢、合金钢 阀座：聚四氟乙烯密封 PTFE、RPTFE、PPL、TFM、UHMW-PE Valve body/butterfly plate: ductile iron, carbon steel, forged steel, stainless steel, Alloy steel, aluminum bronze, Monel, HC, TA2 Stem: 17-4PH, stainless steel, alloy steel Valve seat: Teflon sealed PTFE, RPTFE, PPL,TFM, UHMW-PE	阀体/蝶板：碳钢、不锈钢、合金钢 阀杆：不锈钢、合金钢 阀座：PTFE、PCTFE、PFA Valve body/butterfly plate: carbon steel, stainless steel, alloy steel Stem: stainless steel, alloy steel Valve seat: PTFE, PCTFE, PFA	阀体/蝶板：球铁、碳钢、锻钢、不锈钢、合金钢、铝青铜、Monel、HC、TA2 阀杆：17-4PH、不锈钢、合金钢 阀座：聚四氟乙烯密封 PTFE、RPTFE、PPL、TFM、UHMW-PE Valve body/butterfly plate: ductile iron, carbon steel, forged steel, stainless steel, Alloy steel, aluminum bronze, Monel, HC, TA2 Stem: 17-4PH, stainless steel, alloy steel Valve seat: Teflon sealed PTFE, RPTFE, PPL, TFM, UHMW-PE
适用于：VPSA、PSA、制氮制氧、空气分离高速、高频率切断调节控制 Applicable to: VPSA, PSA, nitrogen production and oxygen production, high-speed air seperation, high-frequency cut-off adjustment control	适用于：VPSA、PSA、制氮制氧、空气分离高速、高频率切断调节控制 Applicable to: VPSA, PSA, nitrogen production and oxygen production, high-speed air seperation, high-frequency cut-off adjustment control	适用于：化学工厂、食品工厂、药制工厂、气体工厂、溶剂工厂等行业领域的开关与调节 Applicable to: switch and adjustment of chemical factories, food factories, pharmaceutical factories, gas factories, solvent factories and other industrial fields	适用于：纯水、空调冷温水、海水、水、福尔马林溶液、有机溶剂、空气、氧气、废气、氮气、焦化气、城市气体、工业生产自动化等行业 Applicable to: pure water, air-conditioning cold and warm water, sea water, water, formalin solution, organic solvent, air, oxygen, exhaust gas, nitrogen, coking gas, city gas, and other automation production industries.

以上资料仅供参考，具体参数以罗杰斯技术部规格书为标准

成套系统解决方案
Whole-set System Solution

D800L系列凸耳式气动蝶阀 D800L Series Lug Type Pneumatic Butterfly Valve	**D800L系列凸耳式蝶阀** D800L Series Lug Type Butterfly Valve	**D800L系列凸耳式蜗轮蝶阀** D800L Series Lug Type Geared Butterfly valve	**D800D系列双法兰蝶阀** D800D Series Double Flanged Butterfly Valve
			
• 双偏心设计使蝶板与密封面快速分离，减少摩擦，高频率高使用寿命 • 带自动补偿设计的G型阀座保持可靠密封 • 无油自润滑轴套 • 独特的动载补偿密封设计填料，杜绝了阀门外漏 • 防飞出设计防止阀杆被破坏吹出 • 防静电设计 • Double eccentric design makes the butterfly plate and the sealing surface separate quickly, reducing friction, high frequency and long service life • G-type valve seat with automatic compensation design keeps reliable sealing • Oil-free self-lubricating bushing • Unique packing for dynamic load compensation seal design eliminates the valve Leakage • Anti-flying design prevents the valve stem from being damaged and blown out • Anti-static design	• 双偏心设计使蝶板与密封面快速分离，减少摩擦，高频率高使用寿命 • 带自动补偿设计的G型阀座保持可靠密封 • 无油自润滑轴套 • 独特的动载补偿密封设计填料，杜绝了阀门外漏 • 防飞出设计防止阀杆被破坏吹出 • 防静电设计 • Double eccentric design makes the butterfly plate and the sealing surface separate quickly, reducing friction, high frequency and long service life • G-type valve seat with automatic compensation design keeps reliable sealing • Oil-free self-lubricating bushing • Unique packing for dynamic load compensation seal design eliminates the valve Leakage • Anti-flying design prevents the valve stem from being damaged and blown out • Anti-static design	• 双偏心设计使蝶板与密封面快速分离，减少摩擦，高频率高使用寿命 • 带自动补偿设计的G型阀座保持可靠密封 • 无油自润滑轴套 • 独特的动载补偿密封设计填料，杜绝了阀门外漏 • 防飞出设计防止阀杆被破坏吹出 • 防静电设计 • Double eccentric design makes the butterfly plate and the sealing surface separate quickly, reducing friction, high frequency and long service life • G-type valve seat with automatic compensation design keeps reliable sealing • Oil-free self-lubricating bushing • Unique packing for dynamic load compensation seal design eliminates the valve Leakage • Anti-flying design prevents the valve stem from being damaged and blown out • Anti-static design	• 双偏心设计使蝶板与密封面快速分离，减少摩擦，高频率高使用寿命 • 带自动补偿设计的G型阀座保持可靠密封 • 无油自润滑轴套 • 独特的动载补偿密封设计填料，杜绝了阀门外漏 • 防飞出设计防止阀杆被破坏吹出 • 防静电设计 • Double eccentric design makes the butterfly plate and the sealing surface separate quickly, reducing friction, high frequency and long service life • G-type valve seat with automatic compensation design keeps reliable sealing • Oil-free self-lubricating bushing • Unique packing for dynamic load compensation seal design eliminates the valve Leakage • Anti-flying design prevents the valve stem from being damaged and blown out • Anti-static design
尺寸 (mm)：50-2000 温度 (℃)：-50-250 压力 (Mpa)：1.0、1.6、150LB、10K、16K 连接标准：GB、ANSI、JIS、DIN、EN Size (mm): 50-2000 Temperature (℃): -50-250 Pressure (Mpa): 1.0, 1.6, 150LB, 10K, 16K Connection standards: GB, ANSI, JIS, DIN, EN	尺寸 (mm)：50-2000 温度 (℃)：-50-250 压力 (Mpa)：1.0、1.6、150LB、10K、16K 连接标准：GB、ANSI、JIS、DIN、EN Size (mm): 50-2000 Temperature (℃): -50-250 Pressure (Mpa): 1.0, 1.6, 150LB, 10K, 16K Connection standards: GB, ANSI, JIS, DIN, EN	尺寸 (mm)：50-2000 温度 (℃)：-50-250 压力 (Mpa)：2.5、4.0、6.3、10、300LB、600LB 连接标准：GB、ANSI、JIS、DIN、EN Size (mm): 50-2000 Temperature (℃):-50-250 Pressure (Mpa): 2.5, 4.0, 6.3, 10, 300LB, 600LB Connection standards: GB, ANSI, JIS, DIN, EN	尺寸 (mm)：50-2000 温度 (℃)：-50-250 压力 (Mpa)：1.0、1.6、150LB 连接标准：GB、ANSI、JIS、DIN、EN Size (mm): 50-2000 Temperature (℃): -50-250 Pressure (Mpa): 1.0, 1.6, 150LB Connection standards: GB, ANSI, JIS, DIN, EN
阀体/蝶板：球铁、碳钢、锻钢、不锈钢、合金钢、铝青铜、Monel、HC、TA2 阀杆：17-4PH、不锈钢、合金钢 阀座：聚四氟乙烯密封 PTFE、RPTFE、PPL、TFM、UHMW-PE Valve body/butterfly plate: ductile iron, carbon steel, forged steel, stainless steel, Alloy steel, aluminum bronze, Monel, HC, TA2 Stem: 17-4PH, stainless steel, alloy steel Valve seat: Teflon sealed PTFE, RPTFE, PPL, TFM, UHMW-PE	阀体/蝶板：球铁、碳钢、锻钢、不锈钢、合金钢、铝青铜、Monel、HC、TA2 阀杆：17-4PH、不锈钢、合金钢 阀座：聚四氟乙烯密封 PTFE、RPTFE、PPL、TFM、UHMW-PE Valve body/butterfly plate: ductile iron, carbon steel, forged steel, stainless steel, Alloy steel, aluminum bronze, Monel, HC, TA2 Stem: 17-4PH, stainless steel, alloy steel Valve seat: Teflon sealed PTFE, RPTFE, PPL,TFM, UHMW-PE	阀体/蝶板：球铁、碳钢、锻钢、不锈钢、合金钢、铝青铜、Monel、HC、TA2 阀杆：17-4PH、不锈钢、合金钢 阀座：聚四氟乙烯密封 PTFE、RPTFE、PPL、TFM、UHMW-PE Valve body/butterfly plate: ductile iron, carbon steel, forged steel, stainless steel, Alloy steel, aluminum bronze, Monel, HC, TA2 Stem: 17-4PH, stainless steel, alloy steel Valve seat: Teflon sealed PTFE, RPTFE, PPL, TFM, UHMW-PE	阀体/蝶板：球铁、碳钢、锻钢、不锈钢、合金钢、铝青铜、Monel、HC、TA2 阀杆：17-4PH、不锈钢、合金钢 阀座：聚四氟乙烯密封 PTFE、RPTFE、PPL、TFM、UHMW-PE Valve body/butterfly plate: ductile iron, carbon steel, forged steel, stainless steel, Alloy steel, aluminum bronze, Monel, HC, TA2 Stem: 17-4PH, stainless steel, alloy steel Valve seat: Teflon sealed PTFE, RPTFE, PPL, TFM, UHMW-PE
适用于：纯水、空调冷温水、海水、水、福尔马林溶液、有机溶剂、空气、氧气、废气、氮气、焦化气、城市气体、工业生产自动化等行业 Applicable to: pure water, air-conditioning cold and warm water, sea water, water, formalin solution, organic solvent, air, oxygen, exhaust gas, nitrogen, coking gas, city gas, and other automation production industries.	适用于：纯水、空调冷温水、海水、水、福尔马林溶液、有机溶剂、空气、氧气、废气、氮气、焦化气、城市气体、工业生产自动化等行业 Applicable to: pure water, air-conditioning cold and warm water, sea water, water, formalin solution, organic solvent, air, oxygen, exhaust gas, nitrogen, coking gas, city gas, and other automation production industries.	适用于：纯水、空调冷温水、海水、水、福尔马林溶液、有机溶剂、空气、氧气、废气、氮气、焦化气、城市气体、工业生产自动化等行业 Applicable to: pure water, air-conditioning cold and warm water, sea water, water, formalin solution, organic solvent, air, oxygen, exhaust gas, nitrogen, coking gas, city gas, and other automation production industries.	适用于：纯水、空调冷温水、海水、水、福尔马林溶液、有机溶剂、空气、氧气、废气、氮气、焦化气、城市气体、工业生产自动化等行业 Applicable to: pure water, air-conditioning cold and warm water, sea water, water, formalin solution, organic solvent, air, oxygen, exhaust gas, nitrogen, coking gas, city gas, and other automation production industries.

以上资料仅供参考，具体参数以罗杰斯技术部规格书为标准

成套系统解决方案
Whole-set System Solution

D800W系列高压蜗轮蝶阀 D800W Series High Pressure Geared Butterfly Valve	**D800W系列高压蝶阀** D800W series High Pressure Bare Shaft with Bracket Butterfly Valve	**D800G高平台蝶阀** D800G High-platform Pneumatic Butterfly Valve	**D800G高平台蝶阀** D800G High-platform Butterfly Valve
			
• 双偏心设计使蝶板与密封面快速分离，减少摩擦，高频率高使用寿命 • 带自动补偿设计的G型阀座保持可靠密封 • 无油自润滑轴套 • 独特的动载补偿密封设计填料，杜绝了阀门外漏 • 防飞出设计防止阀杆被破坏吹出 • 防静电设计 • Double eccentric design makes the butterfly plate and the sealing surface separate quickly, reducing friction, high frequency and long service life • G-type valve seat with automatic compensation design keeps reliable sealing • Oil-free self-lubricating bushing • Unique dynamic load compensation seal design packing to prevent valve Leakage • Anti-flying design prevents the valve stem from being damaged and blown out • Anti-static design	• 双偏心设计使蝶板与密封面快速分离，减少摩擦，高频率高使用寿命 • 带自动补偿设计的G型阀座保持可靠密封 • 无油自润滑轴套 • 独特的动载补偿密封设计填料，杜绝了阀门外漏 • 防飞出设计防止阀杆被破坏吹出 • 防静电设计 • Double eccentric design makes the butterfly plate and the sealing surface separate quickly, reducing friction, high frequency and long service life • G-type valve seat with automatic compensation design keeps reliable sealing • Oil-free self-lubricating bushing • Unique dynamic load compensation seal design packing to prevent valve Leakage • Anti-flying design prevents the valve stem from being damaged and blown out • Anti-static design	• 双偏心设计使蝶板与密封面快速分离，减少摩擦，高频率高使用寿命 • 带自动补偿设计的G型阀座保持可靠密封 • 无油自润滑轴套 • 独特的动载补偿密封设计填料，杜绝了阀门外漏 • 防飞出设计防止阀杆被破坏吹出 • 防静电设计 • 标准的ISO5211安装平台设计 • Double eccentric design makes the butterfly plate and the sealing surface separate quickly, reducing friction, high frequency and long service life • G-type valve seat with automatic compensation design keeps reliable sealing • Oil-free self-lubricating bushing • Unique dynamic load compensation seal design packing to prevent valve Leakage • Anti-flying design prevents the valve stem from being damaged and blown out • Anti-static design • Standard ISO5211 installation platform design	• 双偏心设计使蝶板与密封面快速分离，减少摩擦，高频率高使用寿命 • 带自动补偿设计的G型阀座保持可靠密封 • 无油自润滑轴套 • 独特的动载补偿密封设计填料，杜绝了阀门外漏 • 防飞出设计防止阀杆被破坏吹出 • 防静电设计 • 标准的ISO5211安装平台设计 • Double eccentric design makes the butterfly plate and the sealing surface separate quickly, reducing friction, high frequency and long service life • G-type valve seat with automatic compensation design keeps reliable sealing • Oil-free self-lubricating bushing • Unique dynamic load compensation seal design packing to prevent valve Leakage • Anti-flying design prevents the valve stem from being damaged and blown out • Anti-static design • Standard ISO5211 installation platform design
尺寸 (mm)：50-600 温度 (℃)：-50-250 压力 (Mpa)：6.3、10、600LB、30K、40K 连接方式：对夹GB、ANSI、JIS、 DIN、EN Size (mm): 50-600 Temperature (℃): -50-250 Pressure (Mpa): 6.3, 10, 600LB, 30K, 40K Connection mode: Wafer GB, ANSI, JIS, DIN, EN	尺寸 (mm)：50-600 温度 (℃)：-50-250 压力 (Mpa)：6.3、10、600LB、30K、40K 连接方式：对夹GB、ANSI、JIS、 DIN、EN Size (mm): 50-600 Temperature (℃): -50-250 Pressure (Mpa): 6.3, 10, 600LB, 30K, 40K Connection mode: Wafer GB, ANSI, JIS, DIN, EN	尺寸 (mm)：50-1200 温度 (℃)：-50-250 压力 (Mpa)：0.6、1.0、1.6、150LB、5K、10K、16K 连接方式：对夹GB、ANSI、JIS、 DIN、EN Size (mm): 50-1200 Temperature (℃): -50-250 Pressure (Mpa): 0.6, 1.0, 1.6, 150LB, 5K, 10K, 16K Connection mode: Wafer GB, ANSI, JIS, DIN, EN	尺寸 (mm)：50-1200 温度 (℃)：-50-250 压力 (Mpa)：0.6、1.0、1.6、150LB、5K、10K、16K 连接方式：对夹GB、ANSI、JIS、 DIN、EN Size (mm): 50-1200 Temperature (℃): -50-250 Pressure (Mpa): 0.6, 1.0, 1.6, 150LB, 5K, 10K, 16K Connection mode: Wafer GB, ANSI, JIS, DIN, EN
阀体/蝶板：球铁、碳钢、锻钢、不锈钢、合金钢、铝青铜、Monel、HC、TA2 阀杆：17-4PH、不锈钢、合金钢 阀座：聚四氟乙烯密封 PTFE、RPTFE、PPL、TFM、UHMW-PE Valve body/butterfly plate: ductile iron, carbon steel, forged steel, stainless steel, Alloy steel, aluminum bronze, Monel, HC, TA2 Stem: 17-4PH, stainless steel, alloy steel Valve seat: Teflon sealed PTFE, RPTFE, PPL, TFM, UHMW-PE	阀体/蝶板：球铁、碳钢、锻钢、不锈钢、合金钢、铝青铜、Monel、HC、TA2 阀杆：17-4PH、不锈钢、合金钢 阀座：聚四氟乙烯密封 PTFE、RPTFE、PPL、TFM、UHMW-PE Valve body/butterfly plate: ductile iron, carbon steel, forged steel, stainless steel, Alloy steel, aluminum bronze, Monel, HC, TA2 Stem: 17-4PH, stainless steel, alloy steel Valve seat: Teflon sealed PTFE, RPTFE, PPL, TFM, UHMW-PE	阀体/蝶板：球铁、碳钢、锻钢、不锈钢、合金钢、铝青铜、Monel、HC、TA2 阀杆：17-4PH、不锈钢、合金钢 阀座：聚四氟乙烯密封 PTFE、RPTFE、PPL、TFM、UHMW-PE Valve body/butterfly plate: ductile iron, carbon steel, forged steel, stainless steel, Alloy steel, aluminum bronze, Monel, HC, TA2 Stem: 17-4PH, stainless steel, alloy steel Valve seat: Teflon sealed PTFE, RPTFE, PPL, TFM, UHMW-PE	阀体/蝶板：球铁、碳钢、锻钢、不锈钢、合金钢、铝青铜、Monel、HC、TA2 阀杆：17-4PH、不锈钢、合金钢 阀座：聚四氟乙烯密封 PTFE、RPTFE、PPL、TFM、UHMW-PE Valve body/butterfly plate: ductile iron, carbon steel, forged steel, stainless steel, Alloy steel, aluminum bronze, Monel, HC, TA2 Stem: 17-4PH, stainless steel, alloy steel Valve seat: Teflon sealed PTFE, RPTFE, PPL, TFM, UHMW-PE
适用于：纯水、空调冷温水、海水、水、福尔马林溶液、有机溶剂、空气、氧气、废气、氮气、焦化气、城市气体、工业生产自动化等行业 Applicable to: pure water, air-conditioning cold and warm water, sea water, water, formalin solution, organic solvent, air, oxygen, exhaust gas, nitrogen, coking gas, city gas, and other automation production industries.	适用于：纯水、空调冷温水、海水、水、福尔马林溶液、有机溶剂、空气、氧气、废气、氮气、焦化气、城市气体、工业生产自动化等行业 Applicable to: pure water, air-conditioning cold and warm water, sea water, water, formalin solution, organic solvent, air, oxygen, exhaust gas, nitrogen, coking gas, city gas, and other automation production industries.	适用于：纯水、空调冷温水、海水、水、福尔马林溶液、有机溶剂、空气、氧气、废气、氮气、焦化气、城市气体、工业生产自动化等行业 Applicable to: pure water, air-conditioning cold and warm water, sea water, water, formalin solution, organic solvent, air, oxygen, exhaust gas, nitrogen, coking gas, city gas, and other automation production industries.	适用于：纯水、空调冷温水、海水、水、福尔马林溶液、有机溶剂、空气、氧气、废气、氮气、焦化气、城市气体、工业生产自动化等行业 Applicable to: pure water, air-conditioning cold and warm water, sea water, water, formalin solution, organic solvent, air, oxygen, exhaust gas, nitrogen, coking gas, city gas, and other automation production industries.

以上资料仅供参考，具体参数以罗杰斯技术部规格书为标准

成套系统解决方案
Whole-set System Solution

D800W系列手动蝶阀 D800W Series Handwheel Butterfly Valve	**D800W系列涡轮蝶阀** D800W Series Geared Butterfly Valve	**D800W系列加长杆蝶阀** D800W Series Long-stem Butterfly Valve	**D800W系列中压涡轮蝶阀** D800W series Middle-pressure Butterfly Valve
			
• 双偏心设计使蝶板与密封面快速分离，减少摩擦，高频率高使用寿命 • 带自动补偿设计的G型阀座保持可靠密封 • 无油自润滑轴套 • 独特的动载补偿密封设计填料，杜绝了阀门外漏 • 防飞出设计防止阀杆被破坏吹出 • 防静电设计 • Double eccentric design makes the butterfly plate and the sealing surface separate quickly, reducing friction, high frequency and long service life • G-type valve seat with automatic compensation design keeps reliable sealing • Oil-free self-lubricating bushing • Unique packing for dynamic load compensation seal design eliminates the valve Leakage • Anti-flying design prevents the valve stem from being damaged and blown out • Anti-static design	• 双偏心设计使蝶板与密封面快速分离，减少摩擦，高频率高使用寿命 • 带自动补偿设计的G型阀座保持可靠密封 • 无油自润滑轴套 • 独特的动载补偿密封设计填料，杜绝了阀门外漏 • 防飞出设计防止阀杆被破坏吹出 • 防静电设计 • Double eccentric design makes the butterfly plate and the sealing surface separate quickly, reducing friction, high frequency and long service life • G-type valve seat with automatic compensation design keeps reliable sealing • Oil-free self-lubricating bushing • Unique packing for dynamic load compensation seal design eliminates the valve Leakage • Anti-flying design prevents the valve stem from being damaged and blown out • Anti-static design	• 双偏心设计使蝶板与密封面快速分离，减少摩擦，高频率高使用寿命 • 带自动补偿设计的G型阀座保持可靠密封 • 无油自润滑轴套 • 独特的动载补偿密封设计填料，杜绝了阀门外漏 • 防飞出设计防止阀杆被破坏吹出 • 防静电设计 • Double eccentric design makes the butterfly plate and the sealing surface separate quickly, reducing friction, high frequency and long service life • G-type valve seat with automatic compensation design keeps reliable sealing • Oil-free self-lubricating bushing • Unique packing for dynamic load compensation seal design eliminates the valve Leakage • Anti-flying design prevents the valve stem from being damaged and blown out • Anti-static design	• 双偏心设计使蝶板与密封面快速分离，减少摩擦，高频率高使用寿命 • 带自动补偿设计的G型阀座保持可靠密封 • 无油自润滑轴套 • 独特的动载补偿密封设计填料，杜绝了阀门外漏 • 防飞出设计防止阀杆被破坏吹出 • 防静电设计 • Double eccentric design makes the butterfly plate and the sealing surface separate quickly, reducing friction, high frequency and long service life • G-type valve seat with automatic compensation design keeps reliable sealing • Oil-free self-lubricating bushing • Unique packing for dynamic load compensation seal design eliminates the valve Leakage • Anti-flying design prevents the valve stem from being damaged and blown out • Anti-static design
尺寸 (mm)：50-2000 温度 (℃)：-50-250 压力 (Mpa)：0.6、1.0、1.6、150LB、5K、10K、16K 连接标准：对夹GB、ANSI、JIS、DIN、EN Size (mm): 50-2000 Temperature (℃): -50-250 Pressure (Mpa): 0.6, 1.0, 1.6, 150LB, 5K, 10K, 16K Connection standards: Wafer GB、ANSI、JIS、DIN、EN	尺寸 (mm)：50-2000 温度 (℃)：-50-250 压力 (Mpa)：0.6、1.0、1.6、150LB、5K、10K、16K 连接标准：对夹GB、ANSI、JIS、DIN、EN Size (mm): 50-2000 Temperature (℃): -50-250 Pressure (Mpa): 0.6, 1.0, 1.6, 150LB, 5K, 10K, 16K Connection standards: Wafer GB, ANSI, JIS, DIN, EN	尺寸 (mm)：50-2000 温度 (℃)：-50-250 压力 (Mpa)：0.6、1.0、1.6、150LB、5K、10K、16K 连接标准：对夹GB、ANSI、JIS、DIN、EN Size (mm): 50-2000 Temperature (℃):-50-250 Pressure (Mpa): 0.6, 1.0, 1.6, 150LB, 5K, 10K, 16K Connection standards: Wafer GB、ANSI、JIS、DIN、EN	尺寸 (mm)：50-1200 温度 (℃)：-50-250 压力 (Mpa)：2.5、4.0、300LB、20K、30K 连接标准：对夹GB、ANSI、JIS、DIN、EN Size (mm): 50-1200 Temperature (℃): -50-250 Pressure (Mpa): 2.5, 4.0, 300LB, 20K, 30K Connection standards: Wafer GB、ANSI、JIS、DIN、EN
阀体/蝶板：球铁、碳钢、锻钢、不锈钢、合金钢、铝青铜、Monel、HC、TA2 阀杆：17-4PH、不锈钢、合金钢 阀座：聚四氟乙烯密封 PTFE、RPTFE、PPL、TFM、UHMW-PE Valve body/butterfly plate: ductile iron, carbon steel, forged steel, stainless steel, Alloy steel, aluminum bronze, Monel, HC, TA2 Stem: 17-4PH, stainless steel, alloy steel Valve seat: Teflon sealed PTFE, RPTFE, PPL, TFM, UHMW-PE	阀体/蝶板：球铁、碳钢、锻钢、不锈钢、合金钢、铝青铜、Monel、HC、TA2 阀杆：17-4PH、不锈钢、合金钢 阀座：聚四氟乙烯密封 PTFE、RPTFE、PPL、TFM、UHMW-PE Valve body/butterfly plate: ductile iron, carbon steel, forged steel, stainless steel, Alloy steel, aluminum bronze, Monel, HC, TA2 Stem: 17-4PH, stainless steel, alloy steel Valve seat: Teflon sealed PTFE, RPTFE, PPL, TFM, UHMW-PE	阀体/蝶板：球铁、碳钢、锻钢、不锈钢、合金钢、铝青铜、Monel、HC、TA2 阀杆：17-4PH、不锈钢、合金钢 阀座：聚四氟乙烯密封 PTFE、RPTFE、PPL、TFM、UHMW-PE Valve body/butterfly plate: ductile iron, carbon steel, forged steel, stainless steel, Alloy steel, aluminum bronze, Monel, HC, TA2 Stem: 17-4PH, stainless steel, alloy steel Valve seat: Teflon sealed PTFE, RPTFE, PPL, TFM, UHMW-PE	阀体/蝶板：球铁、碳钢、锻钢、不锈钢、合金钢、铝青铜、Monel、HC、TA2 阀杆：17-4PH、不锈钢、合金钢 阀座：聚四氟乙烯密封 PTFE、RPTFE、PPL、TFM、UHMW-PE Valve body/butterfly plate: ductile iron, carbon steel, forged steel, stainless steel, Alloy steel, aluminum bronze, Monel, HC, TA2 Stem: 17-4PH, stainless steel, alloy steel Valve seat: Teflon sealed PTFE, RPTFE, PPL, TFM, UHMW-PE
适用于：纯水、空调冷温水、海水、水、福尔马林溶液、有机溶剂、空气、氧气、废气、氮气、焦化气、城市气体、工业生产自动化等行业 Applicable to: pure water, air-conditioning cold and warm water, sea water, water, formalin solution, organic solvent, air, oxygen, exhaust gas, nitrogen, coking gas, city gas, and other automation production industries.	适用于：纯水、空调冷温水、海水、水、福尔马林溶液、有机溶剂、空气、氧气、废气、氮气、焦化气、城市气体、工业生产自动化等行业 Applicable to: pure water, air-conditioning cold and warm water, sea water, water, formalin solution, organic solvent, air, oxygen, exhaust gas, nitrogen, coking gas, city gas, and other automation production industries.	适用于：纯水、空调冷温水、海水、水、福尔马林溶液、有机溶剂、空气、氧气、废气、氮气、焦化气、城市气体、工业生产自动化等行业 Applicable to: pure water, air-conditioning cold and warm water, sea water, water, formalin solution, organic solvent, air, oxygen, exhaust gas, nitrogen, coking gas, city gas, and other automation production industries.	适用于：纯水、空调冷温水、海水、水、福尔马林溶液、有机溶剂、空气、氧气、废气、氮气、焦化气、城市气体、工业生产自动化等行业 Applicable to: pure water, air-conditioning cold and warm water, sea water, water, formalin solution, organic solvent, air, oxygen, exhaust gas, nitrogen, coking gas, city gas, and other automation production industries.

以上资料仅供参考，具体参数以罗杰斯技术部规格书为标准

蝶阀型号编制说明

Illustration Of Categorizing Of The Butterfly Valve Model

1	2	3	4	—	5	—	6	7	8	9	—	10
DB	A	8	150		M		20	17	34	TT		6"(DN150)

例如：要订购标准型、美标、对夹式、150磅级、手动、阀体材料为WCB，阀杆材料为17-4PH，蝶板材料为CF8，密封材料为PTFE，阀门通径为6"(DN150)的蝶阀。

For example: to order standard type, American standard, wafer type, 150 pounds, manual, valve body material is WCB, stem material is 17-4PH, butterfly plate material is CF8, sealing material is PTFE, valve diameter is 6"(DN150) butterfly valve.

型号编写为：DBA8150-M-201734TT-6"

THe model is written as: DBA8150-M-201734TT-6"

1	阀门的特征代号	Valve feature code
DB	标准型	Standard code
DF	防火型(耐火型)	Fireproof type (fire resistant type)
DG	高平台型	High platform type
DY	金属密封	Metal seal

2	设计标准代号	Design standard code
G	国标	GB.JB
A	美标	ANSI
J	日标	JIS
D	德标	DIN
B	英标	BS

3	连接形式代号	Connection type code
8	对夹式	Wafer type
6	焊接式	Welded type
5	多耳式(单法兰)	Lug type (single flange)
4	法兰式(双法兰)	Flange type (double flange)

4	压力等级代号 Pressure class code
150	ANSI CLASS 150Lb
300	ANSI CLASS 300 Lb
600	ANSI CLASS 600 Lb
010	JB79-94, PN10
016	JB79-94, PN16
025	JB79-94, PN25
040	JB79-94, PN40
100	JB79-94, PN100
10K	JIS 10K
20K	JIS 20K
30K	JIS 30K
40K	JIS 40K

5	驱动方式代号	Driving mode code
M	手动	Manual
K	光杆	Bare shaft
G	蜗轮传动	Worm gear
P	气动	Pneumatic
D	电动	Electric
Y	液动	Surge

6	阀体材料代号	Body material code
20	碳钢WCB	Carbon steel
34	不锈钢CF8	Stainless steel
36	不锈钢CF8M	Stainless steel
41	不锈钢CF3	Stainless steel
61	不锈钢CF3M	Stainless steel
66	蒙乃尔	Monel
88	哈氏合金	Ha's alloy

7	阀杆材料代号	Stem material code
17	马氏体不锈钢17-4PH	Martensite stainless steel 17-four PH
34	不锈钢304	Stainless steel 304
36	不锈钢316	Stainless steel 316
13	不锈钢1CR13	Stainless steel CR13 1
23	不锈钢2CR13	Stainless steel CR13 2

8	蝶板材料代号	Butterfly plate material code
22	碳钢 + 不锈钢(或合金钢)	Carbon steel and stainless steel (or alloy steel)
00	与阀体材料相同	And the same body material
34	不锈钢CF8	Stainless steel CF8
36	不锈钢CF8M	Stainless steel CF8M
41	不锈钢CF3	Stainless steel CF3
61	不锈钢CF3M	Stainless steel CF3M

9	密封阀座的材料代号 Seal of the seat material code
TT	PTFE聚四氟乙烯
MT	RPTFE增强聚四氟乙烯
PL	对位聚苯PPL
PK	PEEK
YT	耐烧合金钢+PTFE
TF	TFM1600/1700
YK	INCONEL

10	Valve size 阀门通径
美标	2"-120"(英寸inch)
国标	DN50-DN3000 (mm)

以上资料仅供参考，具体参数以罗杰斯技术部规格书为标准

产品独特性能
Unique Performance Of The Product

超高性能蝶阀是本公司自行研制并引进美国罗杰斯技术。该蝶阀具有超独特的产品结构，超可靠的密封性能，超广阔的工况条件，超低小的操作扭矩，超长久的使用寿命，特殊工况安全防火，同类产品处于世界领先地位。

The ultra-high performance butterfly valve is a patented product developed by our company and imported from USA.This butterfly valve has a unique product structure, ultra reliable sealing performance, ultra wide working conditions, ultra-low operating torque, ultra long service life, and special working conditions for safety and fire prevention. Similar products are in a leading position in the world.

阀门尺寸有 Valve size includes

DBA8150(对夹式)	2"~80"	(DN50~2000)
DBA5/4150(单/双法兰式)	2 1/ 2"~80"	(DN65~2000)
DFA8150(防火型)	3"~80"	(DN80~2000)
DBA8300(对夹式)	2"~80"	(DN50~2000)
DBA5/4300(单/双法兰式)	2 1/2"~80"	(DN65~2000)
DFA8300(防火型)	3"~80"	(DN80~2000)
DBA9150(对夹式)	2"~80"	(DN50~2000)

该系列高性能对夹式蝶阀使用多种结构材料，包括符合NACE要求和抗磨蚀的。并可提供用于氯气、氧气、高真空和腐蚀性介质及低温环境的特殊阀门。

The series of high performance wafer type butterfly valves uses various structure materials，including those that meet NACE requirements, and anticorrosive materials. Special valves that can be used in chlorine,oxygen,high vacuum,corrosive media, and cryogenic condition are also available.

特点 Features

-使用独特的动载密封PTFE阀座设计，弹性好，可靠性高;
-无须增加O形圈或金属部件来保持密封;
-唇缘式密封结构可补偿温度和压力的变化;
-使用寿命长，维修量小;
-密封试验，双向达到无气泡泄漏。

-The unique dynamic load seal PTFE seat design is adopted with good elasticity, and high reliability.
-The sealing can be maintained without adding 0-shape ring or any metal part.
-The lip-edge sealing structure can compensate for the changes of temperature and pressure.
-It boasts of a longer working life, and a smaller capacity of repairs.
-In seal test,there are no bubble，or leakage at both directions.

偏置轴和偏心碟板设置 Design of offset shaft and eccentric butterfly plate

-在开启和处于中间位置时阀座与蝶板不发生接触
-在阀座上下部位无磨损点;
-扭矩低，操作机构要求小。

-The seat and butterfly plate do not contact each other when the valve is opened or at the middle position.
-There is no wear point at the upper, and lower parts of the seat.
-Low torque with low requirements for operating mechanism.

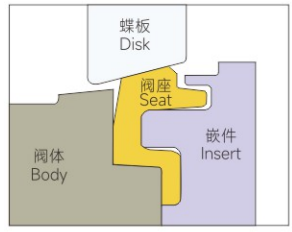

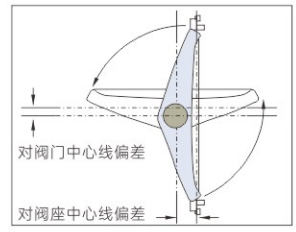

耐火结构 Fire resistant structure

耐火型阀门按API607经过火烧试验。

The fire resistant type valve is subjected to fire test according to API 607.

阀座类型 Seat type

PTFE、R-PTFE、PEEK、PPL、TFM1600/1700防火阀座等。

PTFE,R-PTFE,PEEK,PPL,TFM1600/1700Fireproof seat,etc.

轴的固定可靠 Reliable fixing of shaft

轴的顶端有防吹出结构，在轴意外断裂时防止轴的上部移窜出压盖。

The anti-blow-out structure is provided at the top of the shaft to prevent the shaft from running out of the gland.

阀座维修保养方便 Convenient Repair and Maintenance of Valve Seat

只要取下嵌件即可更换阀座，不必拆卸蝶阀和轴。

The valve seat can be replaced simply by screwing off the inse-rts rather than the butterfly valve, and shaft.

断流和控制兼备 Provided with shut-off and control functions

-具有优良的控特性;
-流量特性曲线等比变化;
-调节范围广;
-即使用于控制仍能紧密密封。

-Having excellent control characteristics,
-Proportional change of flow characteristic curve,
-A wide adjusting range
-Tight sealing can be accomplishied even when it is used for control.

以上资料仅供参考，具体参数以罗杰斯技术部规格书为标准

产品结构特征
Structure Features Of Products

超高性能双偏心蝶阀，除常规阀门所适应的工况介质外根据不同的介质，选用了不同结构材料和特殊处理材料,还可用于深冷、蒸汽、氯气、氧气、高真空、抗腐蚀等特殊工况。

Ultra-high performance double eccentric butterfly valve. In addition to the working conditions of the conventional valve, different structural materials and special treatment materials are selected according to different media. It can also be used for cryogenic, steam, chlorine, oxygen, high vacuum, corrosion resistance, etc. Special conditions.

阀门的整体结构 Integral structure of the valve

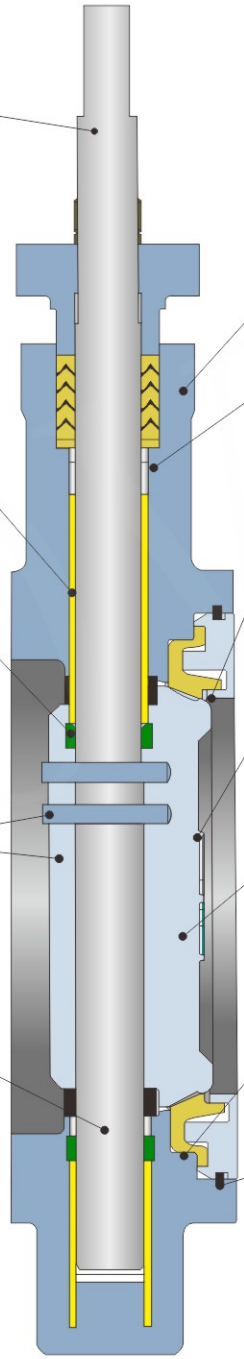

轴顶部的扁显示蝶板的正确位置
The flat tongue at the top of the valve indicates. the correct position of the butterfly plate

PTFE衬里的不锈钢轴承，耐腐蚀性高，并能自润滑
The PTFE-lined stainless steel bearing is highly anti-corrosive and self-lubricating.

止推垫圈保持蝶板的中心位置
The thrust washer maintains the central position of the butterfly plate.

压入式的直销使阀杆与蝶板结合更稳定，同时外观更整洁，有效增强介质的流通性能。
The press-in straight pin makes the stem and the butterfly plate link more stably, and the appearance cleaner, which effectively enhances the flowing capacity of media.

整体式单直径轴把偏差减小到最低。
The integral single diameter shaft reduces deviation to the minimum extent.

可直接刚性安装执行机构
The rigid actuator can be directly installed

PTFE V形填料，也可提供石墨石棉填料
PTFE V-shape packing or graphite asbestos packing is available

阀体嵌件防止阀座磨损和腐蚀
Body inserts prevent the valve seat from wear and corrosion

偏心蝶板的转动不以阀座支点，减少了扭矩和阀座磨损。
The rotation of the eccentric butterfly plate does not take the seat as the pivot, so that torque and seat wear are reduced.

蝶板设计使该阀门的最高扭矩点低于常规阀门。
The design of the butterfly plate makes the tiptop of the valve's torque lower than that of the conventional ones.

S型弹性密封阀座,确保关闭可靠,可自动补偿磨损。
The S-shape elastic airproof seat ensures reliable closing and automatically compensates for wear.

拆卸阀座，不需要拆轴和蝶板。
The seat can be disassembled without the need of removing the shaft and butterfly plate.

以上资料仅供参考，具体参数以罗杰斯技术部规格书为标准

产品结构特征
Structure Features Of Products

独特的阀座密封结构Unique Seat Sealing Structure

传统的中线蝶阀是衬氟或衬胶，而本公司采用的美国罗杰斯引进和自行研制改进的独立单一体的G型弹性密封阀座结构，使用了进口的RPTFE材料，弹性好，寿命长，可自动补偿温度和压力的变化，以及因长期开关使用而磨损的密封补偿；能达到双向密封无泄漏;采用活动嵌件结构，保养快捷方便，不必拆卸蝶板和阀杆，只要单面取下嵌件，即可更换密封阀座和检修密封面。

The traditional central line butterfly valve is lined with fluorine or rubber, but the S-shape elastic airproof seat structure independently researched, and developed by our company through introducing technology from USA adopts the imported RPTFE material with good elasticity, and long working life. It can automatically compensate for the changes of temperature and pressure and can realize sealing compensation for the wear due to long time opening, closing and use. It can realize double-direction sealing without any leakage as well. And it adopts mobile inserts structure, which its quick and easy to upkeep and convenient without the need of removing the butterfly plate and stem. The seal seat can be replaced, and the sealing face can be repaired just through taking off the inserts at one side.

阀座密封 Seat Sealing

ANSI/FCI 70--2规定了控制阀的泄漏等级和试验程序。其中VI级为最低泄漏等级。高性能对夹式蝶阀能达到MSS-SP61规定的无气泡密封，要高于VI级。

ANSI/FCI 70-2 stipulated the control valve leakage level and test procedures. Among them, the VI level is the lowest leakage level. High performance wafer-style butterfly valve can reach the specification of MSS SP61,which prescribed no bubble seal, higher than the VI level.

阀门关闭时蝶板使阀座稍稍变形，这一变形“激励”了阀座。阀座密封面的激励使它与蝶板的边缘保持持久的密封。

When the valve is closed, the butterfly plate makes the seat slightly deform. The deformation excites the seat and the seat seals. The stimulation of surface of the seat sealing enables permanent sealing to be maintained between the surface and the edges of the butterfly plate.

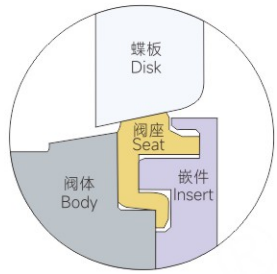

当嵌件侧受压时，压力被施加于唇缘的下方进一步加大了蝶板与阀座之间的密封力。

When the inserts receive pressure, the pressure is exerted at the bottom of the lip edge, which further increases the sealing force between the butterfly plate and seat.

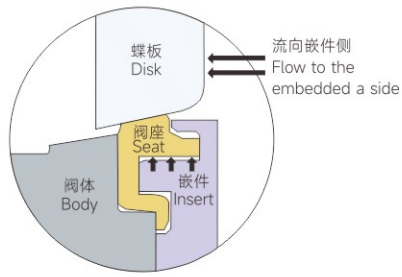

当压力施加于非嵌件的一侧时，蝶板被推向阀座。由于蝶板的轮廓呈球形，蝶板越向阀座推进，关闭就越紧密。唇缘与嵌件底部的槽接触，限制了阀座的过量移动。

When the pressure is exerted at the non-insert side, the butterfly plate is pushed towards the seat. As the butterfly plate is ball shape, the further the butterfly plate is pushed towards the seat, the tighter the closing will be. The common boarder of the lip edge and the bottom of the inserts, limits the excessive movement of the seat.

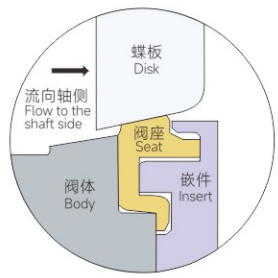

以上资料仅供参考，具体参数以罗杰斯技术部规格书为标准

产品结构特征
Structure Features Of Products

防火耐火结构 Fireproof structure

耐火型蝶阀按API607标准进行设计执行，经过火烧试验。在阀门的使用现场发生火灾时，当聚四氟乙烯等非金属材料制作的阀尾密封圈在高温下分解或破坏时，能借助金属辅助内压自密封结构，起到瞬间密封作用，可有效阻止介质的大量泄漏,控制火灾的蔓延和扩大。

The fire-resistant butterfly valve is designed according to API607 standard, and is subjected to fire testing. If the fire occurs on spot, and the seal ring made of non-metal materials such as PTFE is decomposed or damaged under high temperature, the valve can instantly seal with the help of the structure of metal-aided inside pressure self-sealing,which can effectively prevent large amount of leakage and fire spreading.

偏心阀轴和偏心蝶板的设计结构
Design structure of eccentric valve shaft and eccentric butterfly plate

阀杆采用符合国际标准的高强度不锈钢174PH材料。轴的两端装有不锈钢+RPTFE永久自润滑轴承。蝶板两端配有止推轴套，能有效的控制蝶板定位，防止金属咬合，降低阀座与蝶板发生摩擦的磨损，保证蝶阀开关频繁的可靠性，大大地减轻阀门开关的扭矩。

Design structure of eccentric valve shaft and eccentric butterfly plate The stem is made of high strength stainless steel 174PH that conforms to international standards.Each end of the shaft is provided with the stainless steel +RPTFE permanent self-ubricating bearing. Each end of the butterfly plate is provided with the thrust bush to effectively control the positioning of butterfly valve, avoid the metal jam, reduce the wear of the seat, and butterfly plate, in order to guarantee the reliability of the opening and closing of the butterfly valve, which largely reduces the opening and closing torque of the valve.

独特的开关与控制结构 Unique opening, closing and control structure

2"-6"为手柄开关和近似流量百分比调节控制结构，还可随意按手柄总承的齿轮盘近似流量调整锁定功能，设有开关限位装置;8"以上的蝶阀可根据工况需要合理选型配装蜗轮或电动、气动装置。

For butterfly valves of 2"-6", the handle switch, and approximate flow percentage control structure is adapted. The handle assembly gear plate approximate flow adjusting, and locking function is provided and the switch limit device is also provided. For butterfly valves of 8", and above, They can reasonably choose suitable sets of worm wheel or electric or pneumatic actuator, according to different working conditions.

火烧前
Before Fire

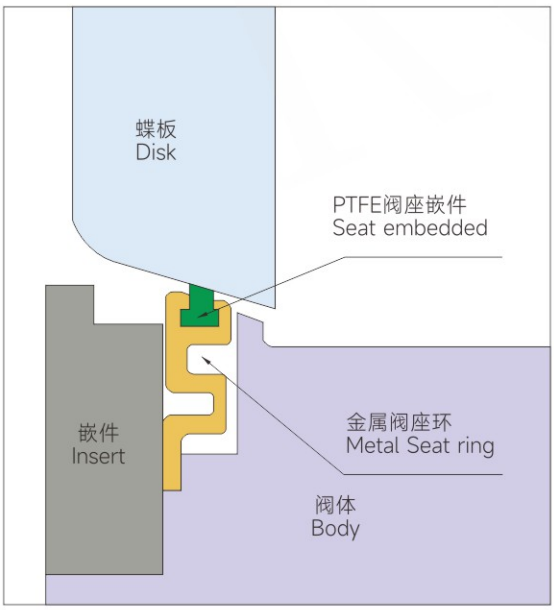

火烧时和火烧后
During fire and after fire

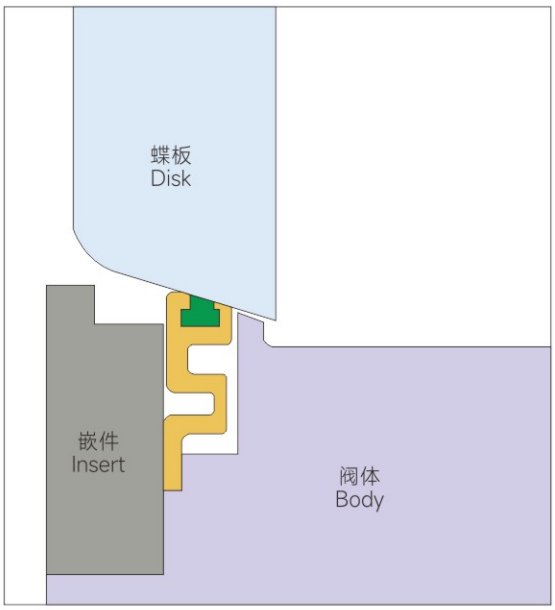

以上资料仅供参考，具体参数以罗杰斯技术部规格书为标准

产品结构特征
Structure Features Of Products

特殊工况 Special working conditions

蒸气工况 Steam working condition

本对夹式蝶阀，包括PTFE阀座的额定值较低的阀门到Peek阀座很适用于蒸气工况。在蒸气工况作开关用的阀门额定值如下表所列，根据轴材料的选用，额定值会减低。

Wafer type butterfly valves, including valves of PTFE seat with lower rated values, and valves with Peek seat, are suitable for working in steam conditions. The rated values of valves used as a switch in the steam working condition are shown in the following table. The rated values may be decreased according to the selected different shaft materials.

氧气工况 Oxygen working condition

本阀门经过特殊处理可用于氧气工况进行断流和控制。在零部件准备、装配、试验和包装方面有一套严格的程序确保清洁、避免氧气与油脂和其它杂质起反应造成内部危险。

After special treatment, the valve can be used for shut-off, and control ir oxygen working condition. A series of strict procedures for spare parts; preparation, assembly, test, and packing are followed to ensure cleanliness, and avoid inherent danger caused by reaction of oxygen with grease, and other impurities.

真空工况 Vacuum working condition

标准的对夹式蝶阀的额定密封可达到真空度$2x10^{-2}$乇。也可提供真空度为$2x10^{-5}$乇的特殊对夹式高真空阀门。此外特殊高真空阀门经确认在真空度为$2x10^{-5}$乇时其氦泄漏率不超过$2x10^{-5}$CC/秒。

Standard wafer type butterfly valves are rated for tight shut-off of vacuum of $2x10^{-2}$ torr. Special high vacuum wafer valves can also be provided for vacuum of $2x10^{-5}$torr. In addition, high-vacuum valves are confirmed to below $2x10^{-5}$ CC/ sec.

高寿命的选择 Selection for high service life

包括增强PTFE轴密封、PEEK-增强PTFE止推轴承在内的零部件组合的阀门其使用寿命要大大高于普通阀门。当然,实际的性能取决于介质、压力和温度条件。氧、氮、氢、水及清洁介质使用这一组合是最为理想的。注意:要避免含有酸、氯、溴、二氧化硫、蒸汽介质及温度超过325° F(163°C)工况。

The service life of valves assembled by spare parts such as reinforced PTFE shaft seal, PEEK-reinforced PTFE thrust bearing, and so on are long lasting than that of ordinary valves. Certainly, the actual performances depend on the media, pressure and temperature and other conditions. It is the most ideal situation that the combination of oxygen, nitrogen, hydrogen, water and clean media is used.

Notice: try to avoid media and temperature such as acid, chlorine, bromine, sulfur dioxide, and steam with temperature exceeding 325° F(163°C) in the working condition.

标准与规范
Standard And Specification

API 609	凸缘式和对夹式蝶阀 Flange type and wafer type butterfly valves	API 607	软密封阀门耐火试验 Soft seal valve fire test
BS6 755	英国阀门试验标准第二部分耐火试验要求 British vave testing standard: part II fire testing requirements	API 598	阀门检验和试验 Valve inspection and testing
MSS SP-25	阀门标准标记体系 Valve standard marking system	ANSI B 16.10	铁素体类阀门面对面，端对端尺寸 Face-to-face and end-to-end dimensions of ferrite valves
MSS SP-44	钢制管线法兰 Steel pipe flange	ANSI B 16.5	钢管法兰和法兰连接件 Pipe flanges and flanged ftings
MSS SP-55	钢铸件质量标准 Quality standard for steel castings	ANSI B 16.47	NPS26-NPS60大口径钢法兰 NPS26-NPS60 large diameter steel flange
MSS SP-61	钢阀门压力试验 Pressure testing of steel valves	ANSI B 16.34	法兰端和对焊端钢制阀门 Flange end and butt welding end steel valves
MSS SP-69	阀门和连接件术语 Terminology for valves and connectors	ANSI B31.1	发电厂管道 Power plant pipes
ANSI B 31.3	化工厂和炼油厂管道 Chemical plant and rfinery piping	ANSI B31.4	无水氨和酒精，碳氢化合物输送系统 Anhydrous ammonia and alcohol, hydrocarbon transpor tation system
ANSI B31.8	气体传输和分配管道系统 Gas transpor tation and distribution pipe system	ANSI/FO 70-2-1991	控制阀门阀座泄漏 Control valve seat leakage

以上资料仅供参考，具体参数以罗杰斯技术部规格书为标准

额定值
Rated Value

阀座额定值 Seat rated value

曲线上表示的阀座额定值只对阀座而言，是基于阀门门全闭是蝶阀两端的压差。这些额定值可作为通用条件下使用指南。依据以往经验，经过改进和变换其他阀座材料，使用的额定值可更高。对于特殊工况，请向ROVV咨询。

The seat rated values indicated on the curve are only for the seat. It is the differential pressure between the two ends of the butterfly valve when the valve is fully closed. These rated values can serve as instructions under general conditions. According to past experience, after updating and changing other seat materials, the rated value they use should be higher For special working condition, please consult ROVV.

阀体额定值 Body rated value

阀体的最大工作压力和各种材料阀体的试验压力示于下面的阀体压力额定值表中。实际工况使用压力要根据阀座额定值来决定。

The maximum working pressure of body and testing pressure of body of various materials are listed in the body pressure ratings table. The actual working pressure in the working conditions shall be decided according to the seat rated values.

150级阀体的额定值(bar)
Rated value of 150lb body (bar)

温度°C Temperature	碳钢* Carbon steel	球铁* Ductile iron	316不锈钢* Stainless steel	20合金* 20# alloy	蒙乃尔 Monel
-20 to 38	19.7	17.2	19.0	15.8	15.8
93	17.9	16.2	16.5	13,8	13.8
149	15.8	14.8	14.8	12,4	13.1
204	13.8	13.8	13.4	11.0	12.8
260	11.7	11.7	11.7	10.3	11.7
试验压力	31	27.6	29.3	24.1	24.1

300级阀体的额定值(bar)
Rated value of 300lb body (bar)

温度°C Temperature	碳钢* Carbon steel	316不锈钢* Stainless steel	20合金* 20# alloy	蒙乃尔 Monel
-20 to 38	51	49.6	41.4	41.1
93	46.5	42.7	35.9	36.5
149	45.2	38.6	32.1	34.1
204	43.8	35.5	29.0	33.1
260	41.4	33.1	26.9	32.8
试验压力	77.6	75.8	62	62

600级阀体额定值一巴(bar)
Rated value of 600lb body (bar)

温度°C Temperature	碳钢 Carbon steel	316不锈钢 Stainless steel
-20 to +38	102	99
93	93	86
149	91	77
204	88	71
260	83	66
试验压力	153	152

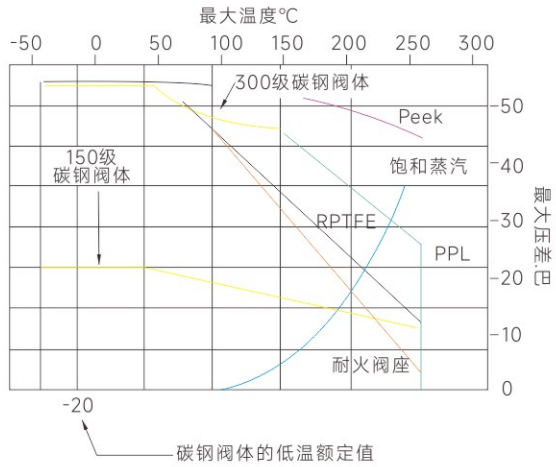

注意：316不锈钢或20号合金阀杆的14"-80"(DN350-2000)的150级阀门的最大压力差为150psi316不锈钢或20号合金阀门的3"-36"(DN80-1000)的300级阀门的最大压力差为300psi

Note: The maximum differential pressure of valve of 316 stainless steel or 20# alloy stem, 14"-80"(DN350-2000), 150lb is 150psi The maximum differential pressure of valve of 316 stainless. steel or 20# alloy stem, 3"-36"(DN80-1000), 300lb is 300psi

以上资料仅供参考，具体参数以罗杰斯技术部规格书为标准

阀门扭矩
Valve Torque

英寸 Inch	DN	lb-ft@ 100psi	N.m@ 6.9bar	lb-ft@ 200psi	N.m@ 13.8bar	lb-ft@ 285psi	N.m@ 19.7bar
2"	50	20	28	22	30	23	31
2-1/2"	65	21	29	23	31	24	33
3"	80	25	34	27	37	29	39
4"	100	35	47	39	53	43	58
5"	125	48	65	56	76	63	86
6"	150	72	97	83	113	93	126
8"	200	121	164	142	193	160	217
10"	250	163	222	202	274	234	318
12"	300	214	290	287	390	350	475
14"	350	362	491	505	684	626	849
16"	400	463	628	646	876	802	1087
18"	450	602	816	844	1144	1050	1423
20"	500	810	1098	1140	1546	1421	1926
24"	600	1234	1673	1758	2384	2200	2983
28"	700	2168	2680	2945	3645	3418	4142
30"	750	2170	2942	2940	3966	3595	4873
32"	800	2865	3675	3745	5023	4865	6413
36"	900	3530	4786	4860	6589	5990	8121
40"	1000	5780	7837	8060	10928	10000	13558
44"	1100	7312	9413	9685	11265	13654	16793
48"	1200	9170	12433	12840	17409	15960	21638
54"	1400	12950	17558	17900	24269	222110	29977
60"	1500	19020	25790	26040	35310	32000	43397

阀门尺寸 Valve size		150磅级扭矩，轴处于下游，防火阀座 关闭压差 Closing differential pressure					
英寸 Inch	DN	lb-ft@ 100psi	N.m@ 6.9bar	lb-ft@ 200psi	N.m@ 13.8bar	lb-ft@ 285psi	N.m@ 19.7bar
2-1/2"	65	42	57	45	61	47	64
3"	80	53	72	57	77	59	81
4"	100	67	91	74	100	80	108
5"	125	97	132	114	155	128	174
6"	150	131	178	152	206	170	230
8"	200	218	296	256	347	288	391
10"	250	333	452	406	550	468	635
12"	300	508	589	636	862	745	1010
14"	350	604	819	758	1028	889	1205
16"	400	710	963	920	1247	1099	1489
18"	450	970	1315	1370	1857	1710	2318
20"	500	1390	1885	1980	2685	2482	3364
24"	600	2050	2779	2700	3661	2200	2983
30"	750	2920	3959	3940	5342	4807	6517
36"	900	3530	4786	4960	6725	5990	8121
42"	1050	5620	7620	7440	10087	10000	13558
48"	1200	8800	11931	12100	16405	14905	20208

阀门尺寸 Valve size		300磅级扭矩，轴处于下游，T,M,U,X阀座 关闭压差 Closing differential pressure											
英寸 Inch	DN	lb-ft@ 300psi	N.m@ 20.7bar	lb-ft@ 400psi	N.m@ 27.6bar	lb-ft@ 500psi	N.m@ 34.5bar	lb-ft@ 600psi	N.m@ 41.4bar	lb-ft@ 700psi	N.m@ 48.3bar	lb-ft@ 740psi	N.m@ 51bar
2"	50	24	33	26	35	28	37	29	40	31	42	32	43
2-1/2"	65	27	36	29	39	31	42	33	45	35	48	36	49
3"	80	31	42	34	46	38	51	41	55	44	60	45	62
4"	100	52	70	58	79	65	88	72	97	78	106	81	110
5"	125	92	153	105	187	135	206	162	232	183	245	193	265
6"	150	119	161	138	188	158	214	178	241	197	267	205	278
8"	200	231	313	271	368	312	422	352	477	392	532	408	554
10"	250	354	480	422	572	490	664	557	756	625	848	652	885
12"	300	492	667	582	790	673	913	764	1035	854	1158	890	1207
14"	350	824	1117	1012	1372	1200	1627	1388	1882	1576	2137	1651	2239
16"	400	989	1340	1212	1643	1435	1946	1658	2248	1881	2550	1970	2671
18"	450	1279	1734	1562	2118	1845	2520	2128	2885	2411	3269	2524	3422
20"	500	1707	2314	2096	2842	2485	3369	2874	3897	3263	4424	3419	4635
24"	600	2309	3131	2832	3840	3355	4549	3878	5258	4401	5967	4610	6251
30"	750	4210	5708	5080	6888	5950	8067	6820	9247	7690	10426	8038	10898
36"	900	7220	9789	8760	11877	10300	13965	11840	16053	13380	18141	13996	18976

阀门尺寸 Valve size		300磅级扭矩，轴处于下游，防火阀座 关闭压差 Closing differential pressure											
英寸 Inch	DN	lb-ft@ 300psi	N.m@ 20.7bar	lb-ft@ 400psi	N.m@ 27.6bar	lb-ft@ 500psi	N.m@ 34.5bar	lb-ft@ 600psi	N.m@ 41.4bar	lb-ft@ 700psi	N.m@ 48.3bar	lb-ft@ 740psi	N.m@ 51bar
3"	80	57	77	58	79	60	81	61	83	63	85	63	86
4"	100	86	117	94	127	102	138	110	149	118	160	121	164
5"	125	138	226	196	252	213	267	226	282	236	305	242	318
6"	150	189	256	212	287	235	319	258	350	281	381	290	394
8"	200	313	424	354	480	395	536	436	591	477	647	493	669
10"	250	464	629	522	708	580	786	638	865	696	944	719	975
12"	300	825	1119	960	1302	1095	1485	1230	1668	1365	1851	1419	1924
14"	350	922	1250	1076	1459	1230	1668	1384	1877	538	2085	1600	2169
16"	400	1170	1586	1396	1885	1610	2183	1830	2481	2050	2779	2138	2899
18"	450	1980	2685	2440	3308	2900	3932	3360	4556	3820	5179	4004	5429
20"	500	2800	3796	3460	4691	4120	5586	4780	6481	5400	7376	5704	7734
24"	600	4400	5966	5400	7321	6400	8677	7400	10033	8400	11389	8800	11931

需要精确计算或介质粘度较大的扭矩请咨询罗杰斯技术部门
For torque that needs precise calculation or with media of higher viscosity, please consult the technology department of ROVV

以上资料仅供参考，具体参数以罗杰斯技术部规格书为标准

阀门扭矩
Valve Torque

阀门尺寸		8600和5600蝶阀 轴处于下游时在所示压差下的扭矩											
英寸 Inch	DN	lb-ft@ 600psi	N.m@ 41.4bar	lb-ft@ 800psi	N.m@ 55.2bar	lb-ft@ 1000psi	N.m@ 69bar	lb-ft@ 1200psi	N.m@ 82.8bar	lb-ft@ 1400psi	N.m@ 96.6bar	lb-ft@ 1480psi	N.m@ 102ar
3"	80	40	55	45	60	48	65	52	70	55	75	57	77
4"	100	115	155	140	190	160	215	185	250	205	280	215	290
6"	150	200	270	235	320	275	375	315	400	355	480	370	500
8"	200	350	475	435	590	515	700	600	815	680	920	710	965
10"	250	620	840	760	1030	900	1220	1040	1410	1180	1600	1240	1685
12"	300	980	1330	1190	1615	1410	1915	1625	2210	1840	2500	1930	2620
14"	350	1320	1790	1610	2185	1910	2595	2200	2990	2500	3400	2620	3560
16"	400	1625	2210	1970	2675	2320	3150	2670	3625	3015	4090	3155	4285
18"	450	2090	2840	2550	3460	3010	4090	3470	4710	3930	5340	4115	5590
20"	500	2760	3750	3400	4620	4040	5485	4680	6355	5320	7225	5575	7570
24"	600	3910	5310	7800	6520	5690	7730	6580	8935	7470	10145	7825	10625

阀门尺寸		8600和5600蝶阀 轴处于上游时在所示压差下的扭矩					
英寸 Inch	DN	lb-ft@600psi	N.m@41.4bar	lb-ft@800psi	N.m@55.2bar	lb-ft@1000psi	N.m@69bar
3"	80	44	60	48	65	53	72
4"	100	130	180	155	210	180	245
6"	150	240	325	290	395	345	470
8"	200	365	500	450	610	535	730
10"	250	630	855	770	1045	910	1235
12"	300	1210	1645	1505	2045	1800	2445
14"	350	1545	2100	1920	2610	2290	3110
16"	400	2030	2757	2515	3415	3000	4075
18"	450	2485	3375	3080	4185	3670	4985
20"	500	2950	4000	3655	4965	4360	5920
24"	600	4335	5890	5370	7290	6400	8690

阀门尺寸		8600和5600蝶阀防火阀座、轴处于上游或下游时在所示压差下的扭矩											
英寸 Inch	DN	lb-ft@ 600psi	N.m@ 41.4bar	lb-ft@ 800psi	N.m@ 55.2bar	lb-ft@ 1000psi	N.m@ 69bar	lb-ft@ 1200psi	N.m@ 82.8bar	lb-ft@ 1400psi	N.m@ 96.6bar	lb-ft@ 1480psi	N.m@ 102ar
3"	80	95	130	105	145	112	150	120	165	130	180	130	180
4"	100	165	225	185	250	205	280	225	305	250	340	255	345
6"	150	360	490	420	570	480	650	540	735	600	815	625	850
8"	200	660	895	775	1050	890	1210	1005	1365	1120	1520	1165	1580
10"	250	1030	1400	1225	1665	1420	1930	1615	2195	1810	2460	1885	2560
12"	300	1780	2420	2140	2905	2500	3395	2860	3885	3220	4375	3365	4570
14"	350	2370	3220	2850	3870	3330	4520	3810	5175	4290	5825	4480	6085
16"	400	3120	4240	3805	5170	4490	6100	5175	7030	5860	7960	6135	8330
18"	450	5015	6810	6240	8475	7460	10130	8680	11790	9905	13450	10395	14115
20"	500	6890	9360	8590	11665	10290	13975	11990	16280	13690	18590	14370	19515
24"	600	10150	13785	12685	17225	15220	20670	17755	24110	20290	27555	21300	28925

以上资料仅供参考，具体参数以罗杰斯技术部规格书为标准

流量参数
Flow Parameters

下表提供了150磅、300磅、600磅级蝶阀的流量系数。Cv值表示压差为1磅/英寸2（0.07巴），温度为60° F(15.6°C)时每分钟流过全开启阀门的水流量，单位为美国加仑数/分钟。

The flow coefficient of 150lb, 300lb and 600lb butterfly valves is listed in the following table. CV value indicates water flow per minute that passes through the fully opened valve when the differential pressure is 1psi (0.07bar) and the temperature is 60°F(15.6°C), and its unit is USgal/min.

150磅级 Class		
阀门尺寸 Valve size	DN	CV
2"	50	56
2-1/2"	65	78
3"	80	165
4"	100	400
5"	125	650
6"	150	1050
8"	200	2200
10"	250	3300
12"	300	5100
14"	350	5800
16"	400	8000
18"	450	10500
20"	500	14000
24"	600	21600
28"	700	30800
32"	800	34000
36"	900	55500
40"	1000	78300
48"	1200	108300
56"	1400	146300
60"	1500	159000

300磅级 Class		
阀门尺寸 Valve size	DN	CV
2"	50	56
2-1/2"	65	78
3"	80	165
4"	100	400
5"	125	650
6"	150	1050
8"	200	1800
10"	250	3150
12"	300	4750
14"	350	5200
16"	400	6900
18"	450	9300
20"	500	11300
24"	600	18500
28"	700	26800
32"	800	29100
36"	900	47500

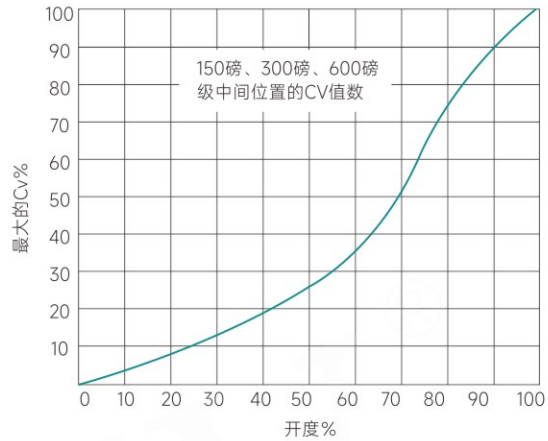

600磅级 Class		
阀门尺寸 Valve size		CV
英寸Inch	DN	
3"	80	155
4"	100	260
6"	150	750
8"	200	1350
10"	250	2100
12"	300	2900
14"	350	4000
16"	400	5100
18"	450	5500
20"	500	7950
24"	600	11300

为确定中间位置阀门的Cv值:
To confirm Cv value of the valve at the middle position:

1.从曲线表中确定最大Cv值的百分率

2.将曲线表中的最大Cv值的百分率乘以流量数据表中的Cv值

1. Confirm the percentage of the maximum Cv value fromthe curve
2. Multiply the percentage of the maximum Cv value from the curve by the Cv value from the flow datasheet

例如: 6"(DN150)150级蝶阀70%开度时的Cv值为:

(1)从曲线表中确定6"(DN150)150级蝶阀70%开度时的最大Cv值的百分率为53%

(2)53%的最大Cv值为，Cv值=0.53x1050=560

For example: The Cv value of the butterfly valve of 6"(DN150), 150lb under opening of 70% is:
(1) Confirm the percentage of the maximum Cv value of the butterfly valve of 6"(DN150), 150lb under opening of 70% is 53%.
(2) The maximum Cv value is: Cv value=0.53 X 1050=560

以上资料仅供参考，具体参数以罗杰斯技术部规格书为标准

8150型对夹式蝶阀
Type 8150 Wafer Butterfly Valve

2至12英寸ANSI 150级 GB PN10/PN16
2"~12"inches ANSI Class 150 GB PN10/PN16

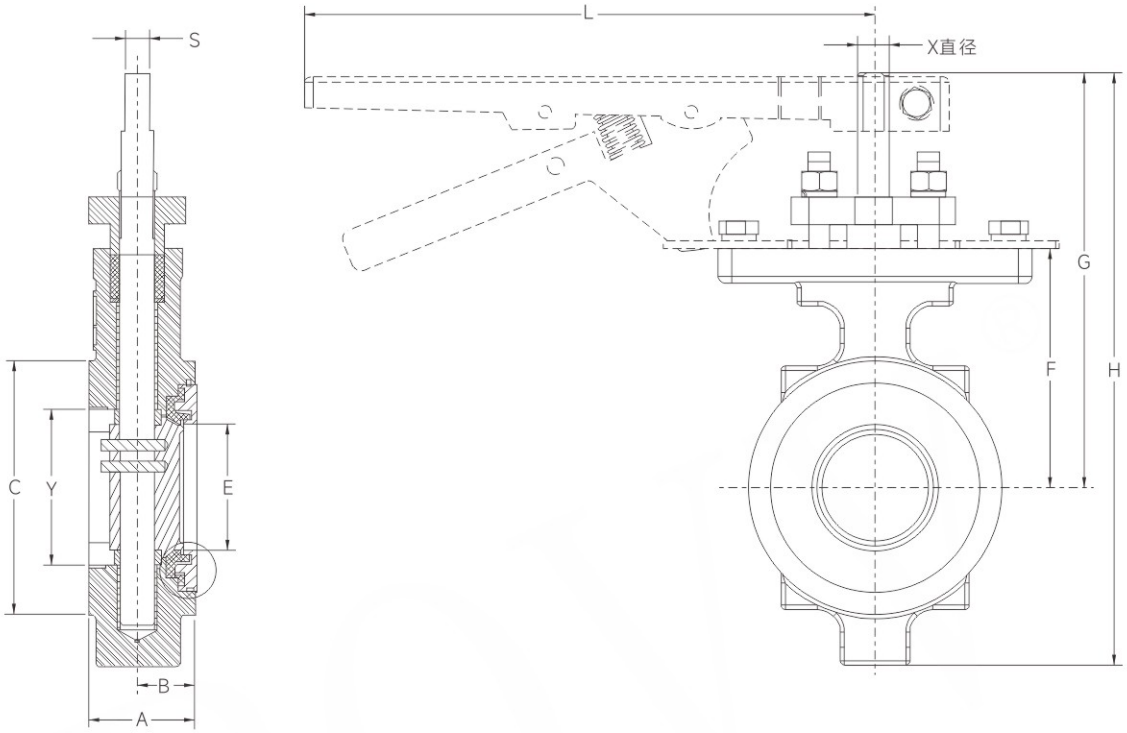

近似尺寸Approximate size(毫米mm)												
阀门尺寸 Inches (DN)	A	B	C	E	F	G	H	L	S 偏榫	X	Y	近似重量(公斤) Weight(kg)
2"(50)	43	23	96	48	80	124	186	230	7	10	58	3.1
2-1/2"(65)	49	27	119	68	111	194	275	230	11.2	14.8	73	4.8
3"(80)	49	27	132	80	121	203	316	230	11.2	14.8	84	5.2
4"(100)	54	30	157	103	133	216	341	280	11.2	14.8	106	7.3
5"(125)	57	30	186	118	135	217	362	280	11.2	14.8	124	9
6"(150)	57	33	216	148	152	235	384	280	14	18	150	12.4
8"(200)	64	36	270	193	187	270	464		15.9	21.9	196	20.9
10"(250)	71	41	324	240	232	325	560		20.6	28	244	33.1
12"(300)	81	48	381	286	260	359	632		23.8	33.3	290	51.4

以上资料仅供参考，具体参数以罗杰斯技术部规格书为标准

8150型对夹式蝶阀

Type 8150 Wafer Butterfly Valve

14至40英寸ANSI 150级 GB PN10/PN16

14"~40"inches ANSI Class 150 GB PN10/PN16

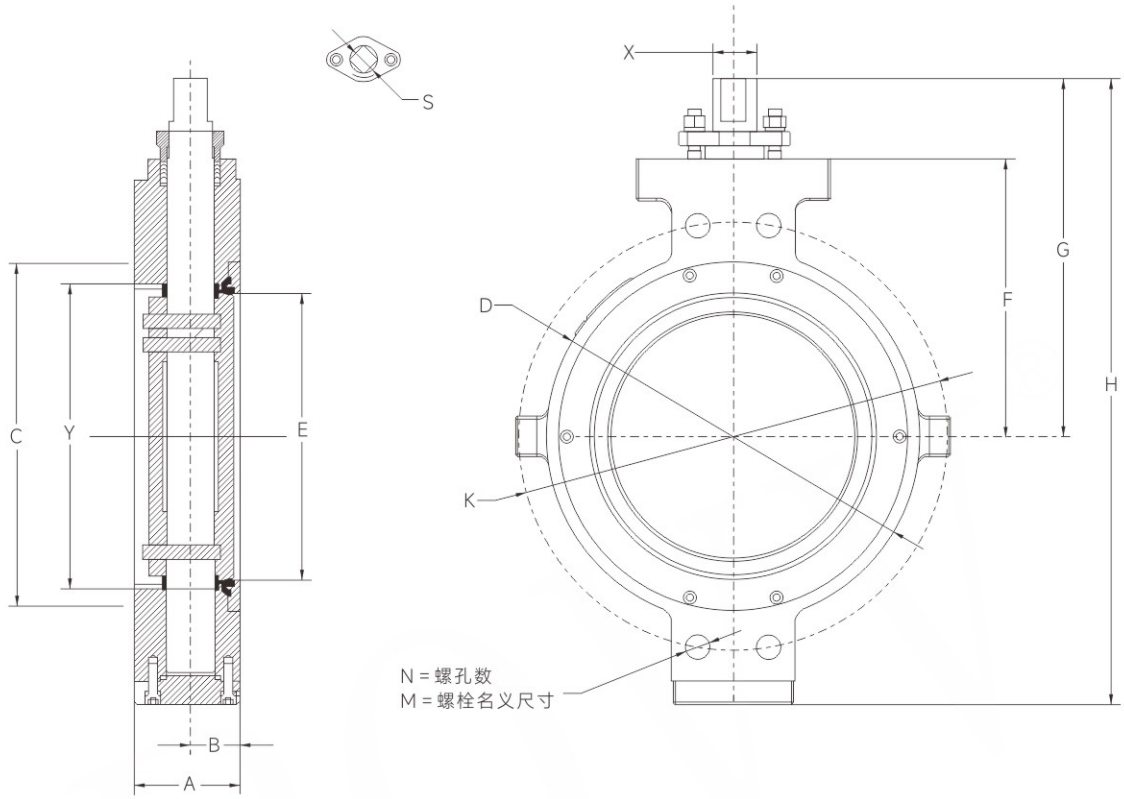

近似尺寸Approximate size(毫米mm)												
阀门尺寸 Inches (DN)	A	B	C	E	F	G	H	L	S	X	Y	近似重量(公斤) Weight(kg)
14"(350)	92	52	413	320	394	413	705	309	28.7	37	335	66.8
16"(400)	102	56	470	369	421	470	742	332	33.45	42	388	97.8
18"(450)	114	67	533	420	449	533	802	356	41.4	47	438	133
20"(500)	127	67	584	462	467	584	842	378	41.4	50	480	171
24"(600)	154	76	692	555	607	692	1161	490	51	64	580	298
26"(650)	165	85	749	555	620	749	1103	480	51	64	630	312
28"(700)	165	87	800	687	697	800	1279	570	60	83	720	390
30"(750)	167	87	857	707	697	857	1307	570	60	83	740	490
32"(800)	190	98	905	710	697	905	1307	570	60	83	740	512
36"(900)	184	112	1022	924	794	1022	1432	660	70	98	886	658
40"(1000)	222	113	1124	998	1067	1124	1731	737	70	98	1016	935

以上资料仅供参考，具体参数以罗杰斯技术部规格书为标准

8300型对夹式蝶阀

Type 8300 Wafer Butterfly Valve

2至12英寸ANSI 300级 GB PN25/PN40

2"~12"inches ANSI Class 300 GB PN25/PN40

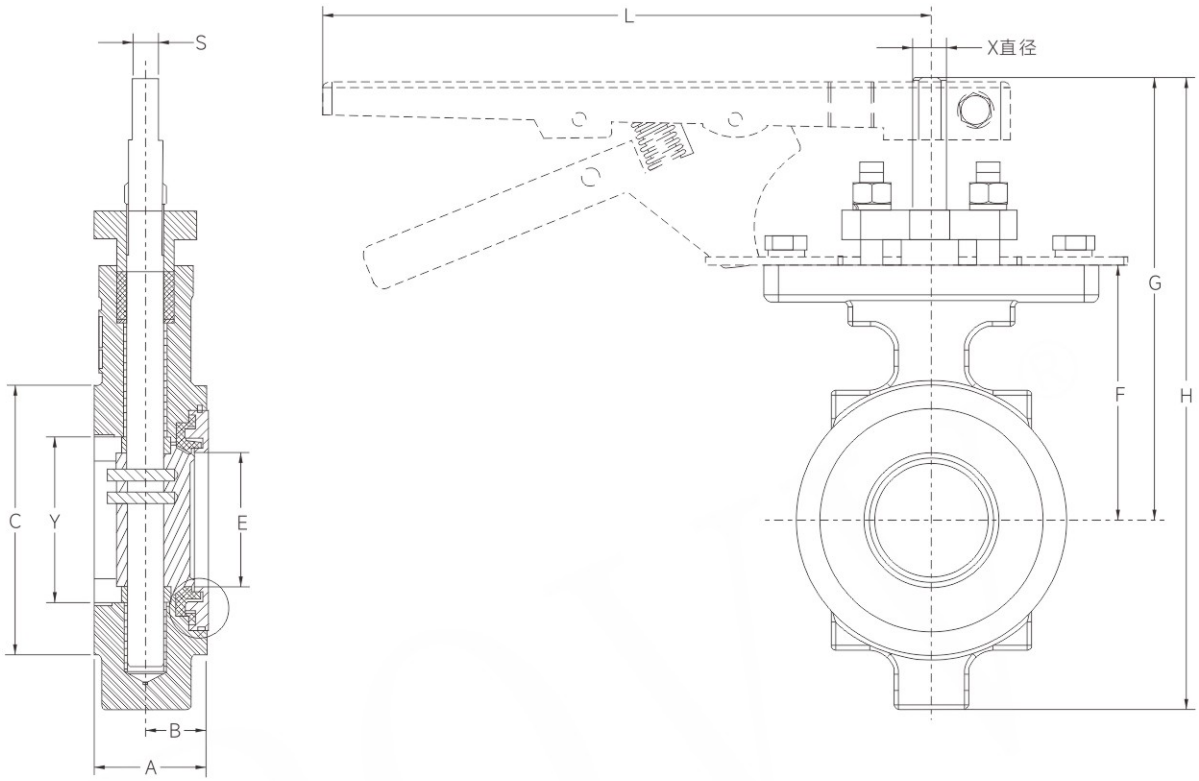

近似尺寸Approximate size(毫米mm)												
阀门尺寸 Inches (DN)	A	B	C	E	F	G	H	L	S 偏榫	X	Y	近似重量(公斤) Weight(kg)
2"(50)	43	23	96	48	80	124	186	230	7	10	58	3.5
2-1/2"(65)	48	27	119	68	111	194	275	230	11.2	14.8	73	5
3"(80)	48	27	132	80	121	203	316	230	11.2	14.8	84	6
4"(100)	54	30	157	103	133	216	341	280	11.2	14.8	106	8
5"(125)	58	30	186	118	135	217	362	280	11.2	14.8	124	11
6"(150)	59	34	216	148	175	257	413	280	14	18	150	15
8"(200)	73	40	270	193	213	306	495	280	15.9	21.9	196	27
10"(250)	83	44	324	240	254	353	592	280	20.6	28	244	48
12"(300)	92	50	381	286	283	389	675	280	23.8	33.3	299	66

以上资料仅供参考，具体参数以罗杰斯技术部规格书为标准

8300型对夹式蝶阀

Type 8300 Wafer Butterfly Valve

14至60英寸ANSI 300级 GB PN25/PN40

14"~60"inches ANSI Class 300 GB PN25/PN40

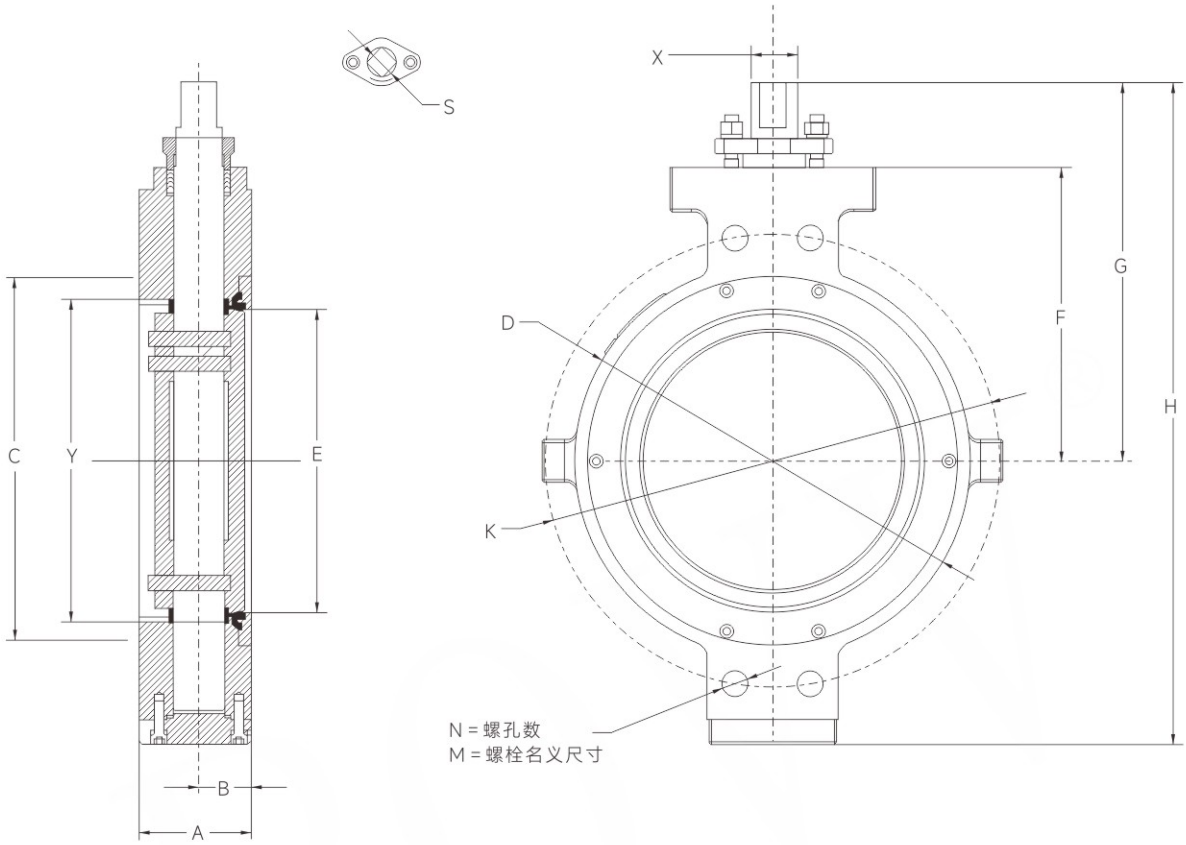

近似尺寸Approximate size(毫米mm)											
阀门尺寸 Inches (DN)	A	B	C	E	F	G	H	S	X	Y	近似重量(公斤) Weight(kg)
14"(350)	118	59	413	298	325	414	732	41	54	314	167
16"(400)	133	62	470	346	351	440	787	41	60	363	195
18"(450)	149	75	533	392	431	548	1062	51	70	414	324
20"(500)	159	81	584	433	454	581	1124	60	89	455	406
24"(600)	181	92	692	524	511	638	1245	70	102	549	631
28"(700)	229	98	800	682	570	697	1279	80	120	700	951
32"(800)	241	98	905	702	570	697	1307	80	120	740	1298
36"(900)	241	102	1022	886	660	794	1432	100	140	924	1784
40"(1000)	300	116	1124	972	713	940	1731	100	140	998	2218
48"(1200)	360	113	1359	1168	845	1130	1953	100	152	1173	3265
56"(1400)	390	142	1578	1362	978	1238	2143	110	165	1382	4010
60"(1500)	440	146	1676	1472	1045	1391	2423	120	180	1468	4763

以上资料仅供参考，具体参数以罗杰斯技术部规格书为标准

8600型对夹式蝶阀

Type 8600 Wafer Butterfly Valve

3至24英寸ANSI 600级 GB PN100

3"~24"inches ANSI Class 600 GB PN100

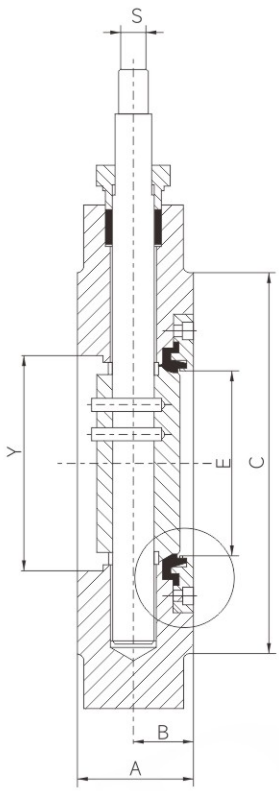

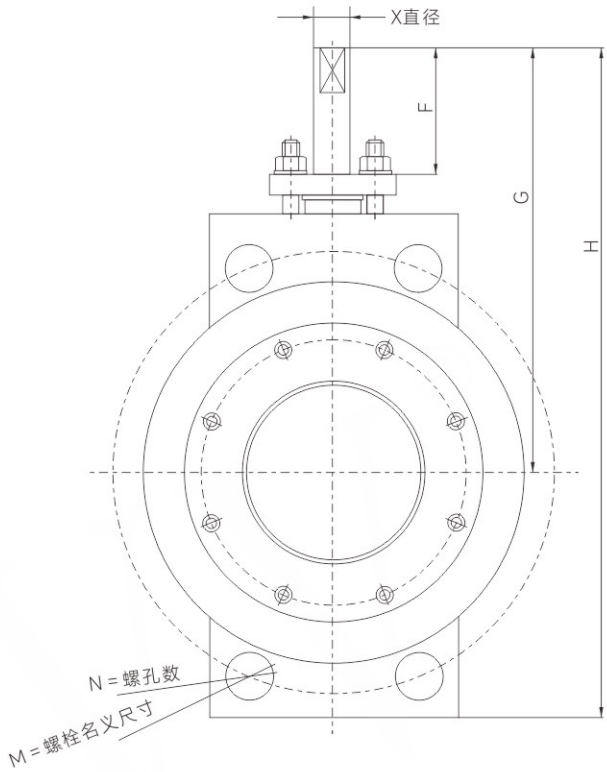

近似尺寸Approximate size(毫米mm)											
阀门尺寸 Inches (DN)	A	B	C	E	F	G	H	S 偏榫	X	Y	近似重量(公斤) Weight(kg)
3"(80)	60	32	127	70	130	200	333	13	16	75	12
4"(100)	73	37	157	90	155	248	422	16	22	100	21
6"(150)	76	41	216	140	206	289	513	22	28	140	32
8"(200)	102	51	270	183	241	337	608	28	38	198	54
10"(250)	121	60	324	227	287	389	721	33	44	237	110
12"(300)	146	73	381	270	344	446	851	41	57	279	163
14"(350)	159	79	451	279	416	533	940	51	70	313	200
16"(400)	171	86	475	311	392	519	914	51	76	362	286
18"(450)	197	98	533	375	498	714	1222	89	89	413	372
20"(500)	210	105	589	416	565	692	1251	89	102	454	485
24"(600)	235	117	752	492	673	889	1559	89	114	533	753

以上资料仅供参考，具体参数以罗杰斯技术部规格书为标准

5150型多耳式单法兰蝶阀

Type 5150 Multi-ear Single Flange Butterfly Valve

2-1/2至12英寸ANSI 150级 GB PN10/PN16

2-1/2"~12"inches ANSI Class 150 GB PN10/PN16

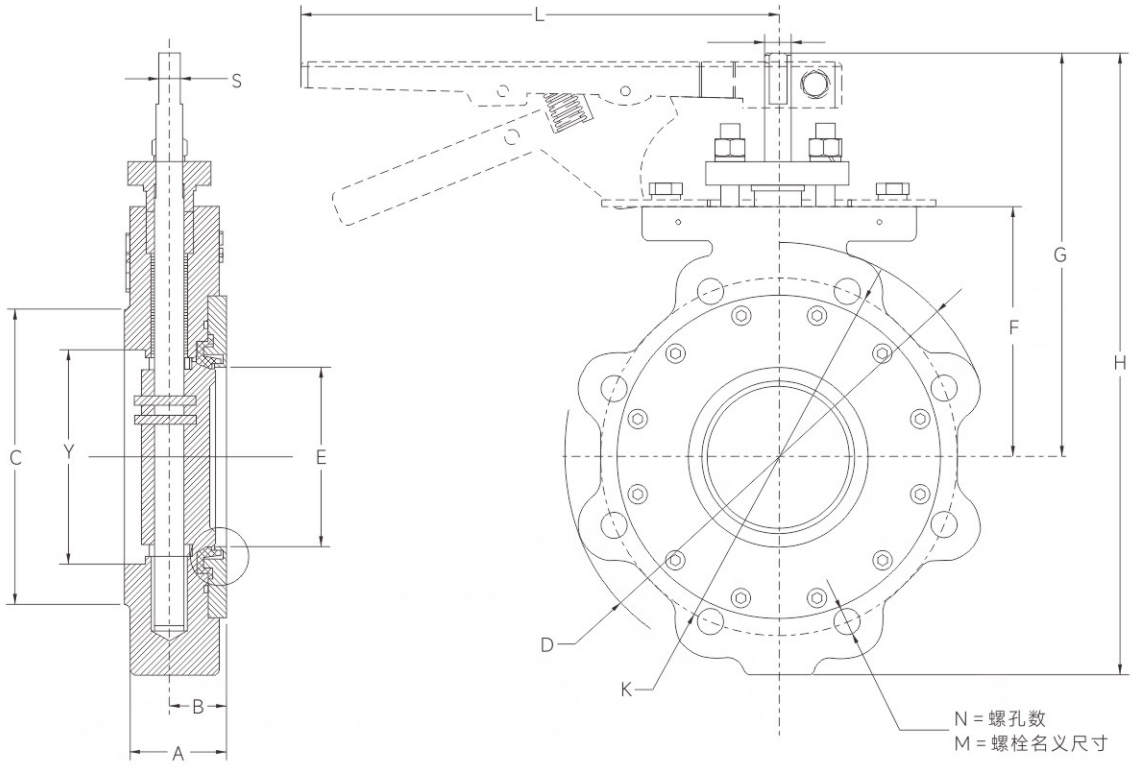

近似尺寸Approximate size(毫米mm)												
阀门尺寸 Inches (DN)	A	B	C	E	F	G	H	L	S 偏榫	X	Y	近似重量(公斤) Weight(kg)
2-1/2"(65)	49	27	105	58	111	194	275	230	11	16	59	7.3
3"(80)	49	27	132	73	121	203	316	230	11	16	74	8.2
4"(100)	54	30	157	95	133	216	341	280	11	16	97	13
5"(125)	57	30	186	111	135	217	341	280	11	16	111	16
6"(150)	57	33	216	142	152	235	384	280	13	19	146	20.2
8"(200)	64	36	270	188	187	270	464		16	22	194	26.3
10"(250)	71	41	324	236	232	325	560		21	29	243	43
12"(300)	81	48	381	282	260	359	632		24	35	289	58

以上资料仅供参考，具体参数以罗杰斯技术部规格书为标准

5150型多耳式单法兰蝶阀

Type 5150 Multi-ear Single Flange Butterfly Valve

14至80英寸ANSI 150级 GB PN10/PN16

14"~80"inches ANSI Class 150 GB PN10/PN16

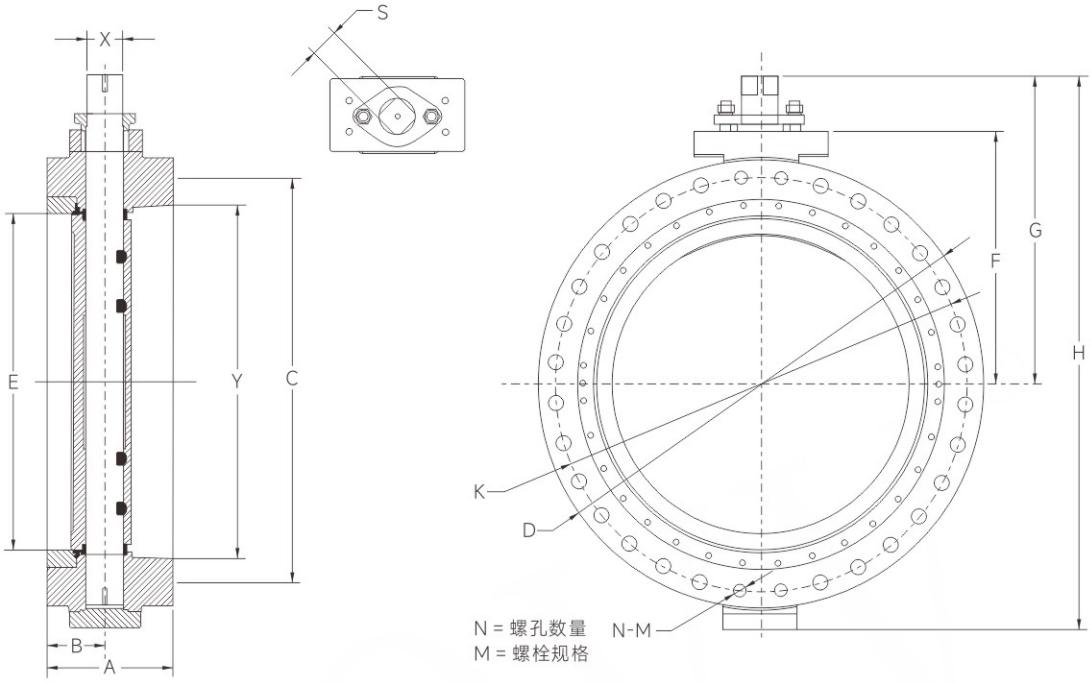

近似尺寸Approximate size(毫米mm)											
阀门尺寸 Inches (DN)	A	B	C	E	F	G	H	S 偏榫	X	Y	近似重量(公斤) Weight(kg)
14"(350)	92	52	413	314	309	394	705	24	41	318	105
16"(400)	102	56	470	363	332	421	742	41	48	365	163
18"(450)	114	67	533	414	356	449	802	41	54	416	205
20"(500)	127	67	584	456	378	467	842	41	60	454	270
24"(600)	154	76	692	549	490	607	1161	51	70	542	437
28"(700)	165	87	800	682	570	697	1279	60	83	700	634
32"(800)	190	98	905	702	570	697	1307	60	89	740	865
36"(900)	203	102	1022	886	660	794	1432	60	102	924	1189
40"(1000)	216	116	1124	972	713	940	1731	80	120	998	1478
48"(1200)	254	113	1359	1168	845	1130	1953	90	140	1173	2177
56"(1400)	279	142	1578	1362	978	1238	2143	100	152	1382	2673
60"(1500)	292	146	1676	1472	1045	1391	2423	110	165	1468	3175
64"(1600)	318	153	1865	1580	1150	1480	2530	110	165	1640	3763
72"(1800)	356	182	2010	1778	1380	1676	2790	120	180	1850	4165
80"(2000)	406	210	2378	1970	1590	1860	3148	120	180	2060	5873

以上资料仅供参考，具体参数以罗杰斯技术部规格书为标准

5300型多耳式单法兰蝶阀

Type 5300 Multi-ear Single Flange Butterfly Valve

3至12英寸ANSI 300级 GB PN25/PN40

3"~12"inches ANSI Class 300 GB PN25/PN40

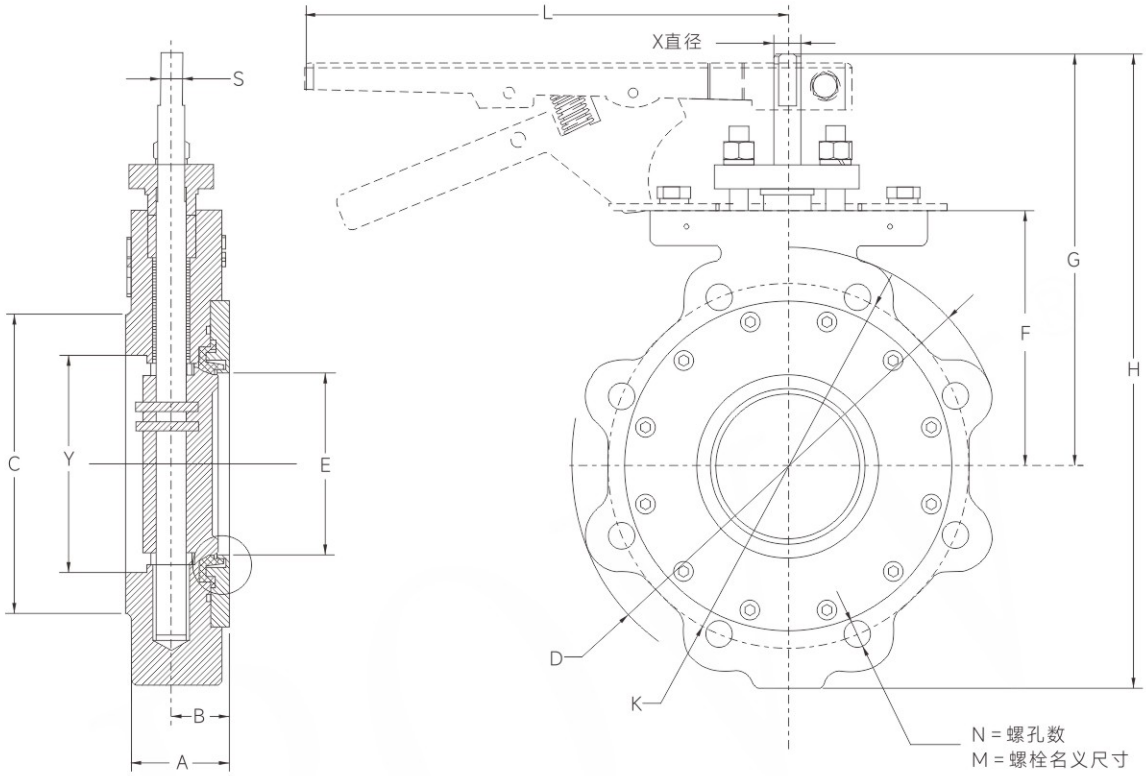

近似尺寸Approximate size(毫米mm)												
阀门尺寸 Inches (DN)	A	B	C	E	F	G	H	L	S 偏榫	X	Y	近似重量(公斤) Weight(kg)
3"(80)	49	27	132	73	121	203	316	230	11.2	14.8	74	9
4"(100)	56	30	157	95	133	216	341	280	11.2	14.8	97	13
5"(125)	64	30	186	124	150	135	362	280	11.2	14.8	118	16
6"(150)	70	34	216	142	175	257	413	280	16	22	146	24
8"(200)	71	40	270	188	213	306	495		21	29	194	42
10"(250)	76	44	324	236	254	353	592		24	35	243	73
12"(300)	83	50	381	282	283	389	675		29	41	289	100

以上资料仅供参考，具体参数以罗杰斯技术部规格书为标准

5300型多耳式单法兰蝶阀

Type 5300 Multi-ear Single Flange Butterfly Valve

14至24英寸ANSI 300级 GB PN25/PN40

14"~24"inches ANSI Class 300 GB PN25/PN40

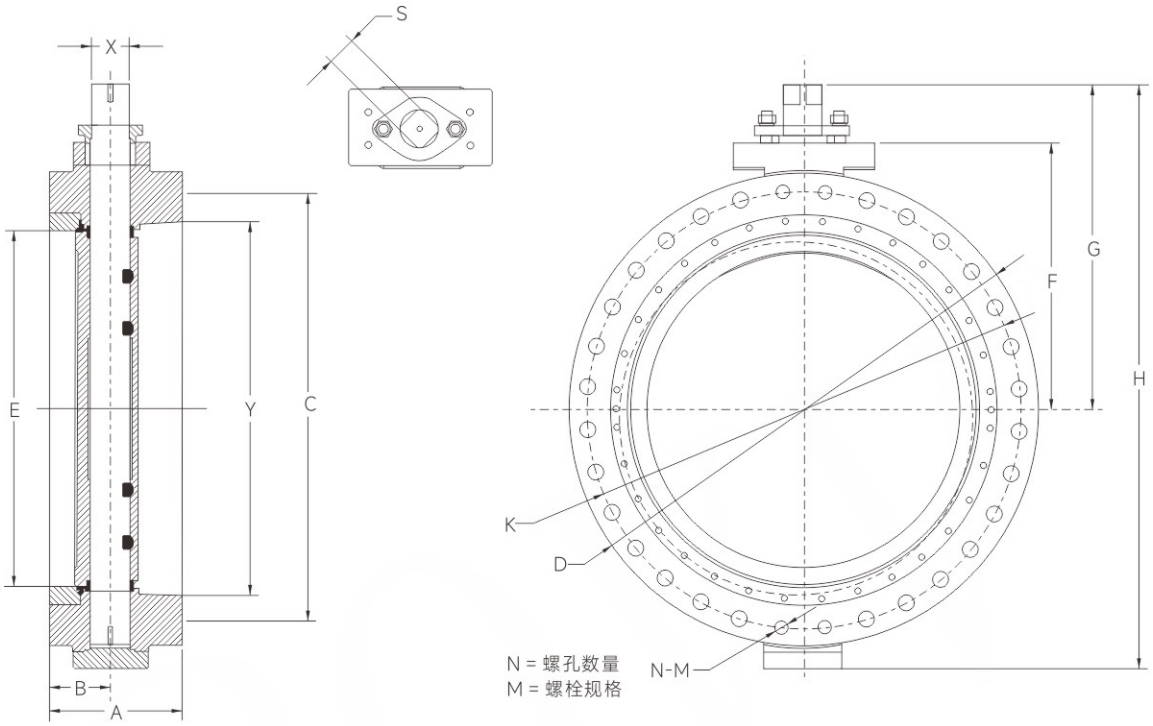

近似尺寸Approximate size(毫米mm)											
阀门尺寸 Inches (DN)	A	B	C	E	F	G	H	S 偏榫	X	Y	近似重量(公斤) Weight(kg)
14"(350)	118	59	413	298	325	414	732	41	54	314	253
16"(400)	133	62	470	346	351	440	787	41	60	363	328
18"(450)	149	75	533	392	431	548	1062	51	70	414	503
20"(500)	162	81	584	433	454	581	1125	51	89	455	648
24"(600)	184	92	692	524	511	638	1245	51	102	549	984

以上资料仅供参考，具体参数以罗杰斯技术部规格书为标准

5600型多耳式单法兰蝶阀

Type 5600 Multi-ear Single Flange Butterfly Valve

3至24英寸ANSI 600级 GB PN100

3"~24"inches ANSI Class 600 GB PN100

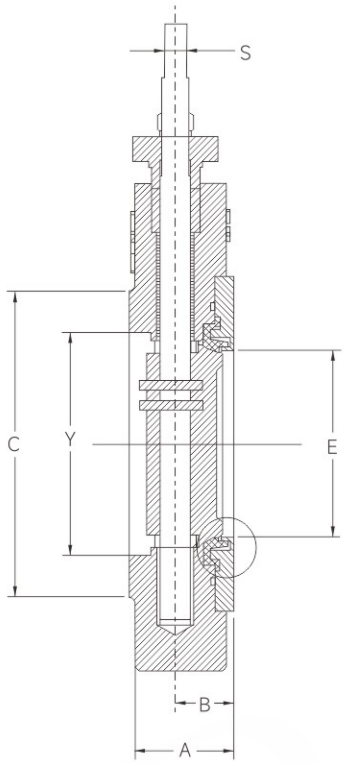

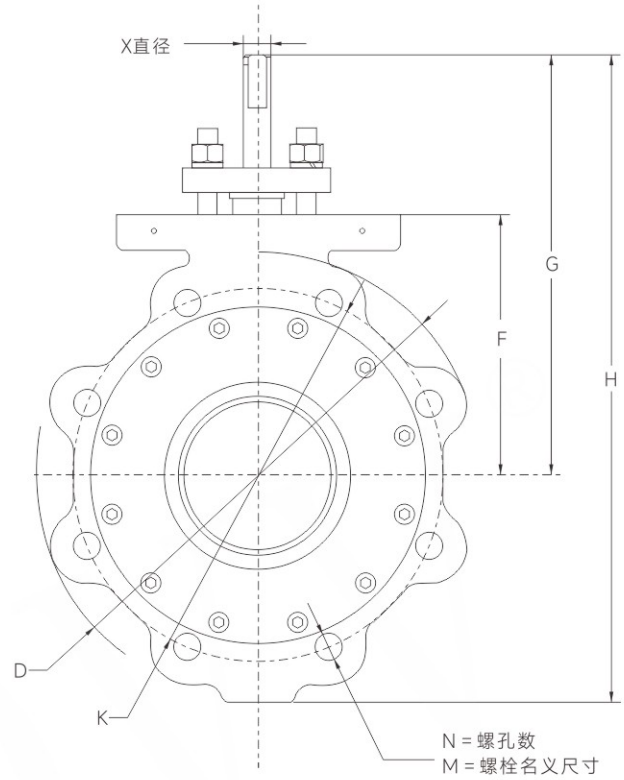

近似尺寸Approximate size(毫米mm)											
阀门尺寸 Inches (DN)	A	B	C	E	F	G	H	S 偏榫	X	Y	近似重量(公斤) Weight(kg)
3"(80)	60	32	127	75	130	200	333	13	16	70	12
4"(100)	73	37	157	100	155	248	422	16	22	90	21
6"(150)	76	41	216	140	206	289	513	22	28	140	32
8"(200)	102	51	270	198	241	337	608	28	38	183	55
10"(250)	121	60	324	237	287	389	721	33	44	227	112
12"(300)	146	73	381	279	344	446	851	41	57	270	165
14"(350)	159	79	413	313	451	533	940	50		279	198
16"(400)	171	86	470	362	475	619	974	50		311	285
18"(450)	192	98	533	413	533	714	1222	90		375	370
20"(500)	210	105	589	454	589	792	1251	90		416	480
24"(600)	235	117	692	533	752	889	1558	90		492	760

以上资料仅供参考，具体参数以罗杰斯技术部规格书为标准

4150型双法兰蝶阀

Type 4150 Double Flange Butterfly Valve

2至80英寸ANSI 150级 GB PN10/PN16

2"~80"inches ANSI Class 150 GB PN10/PN16

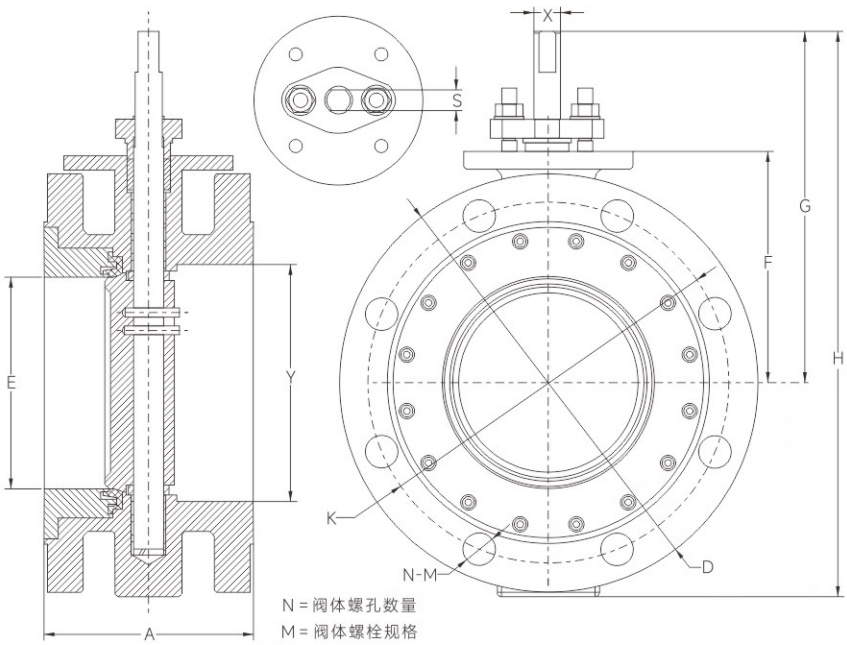

近似尺寸Approximate size(毫米mm)									
阀门尺寸 Inches (DN)	A	E	F	G	H	S 偏榫	X	Y	近似重量(公斤) Weight(kg)
2"(50)	108	48	100	178	178	7	10	58	
2-1/2"(65)	112	68	112	198	198	11.2	14.8	73	
3"(80)	114	73.1	120.7	214.4	296.4	11.2	14.8	84	
4"(100)	127	95.6	133.4	243.4	325.2	11.2	14.8	106	
5"(125)	140	111.4	134.9	261.4	343.6	11.2	14.8	124	
6"(150)	140	141.7	152.4	295.8	378.4	14	18	150	
8"(200)	152	188	187.3	359.3	441	15.9	21.9	196	
10"(250)	165	235.9	231.8	433.8	530.6	20.6	28	244	
12"(300)	178	281.5	260.4	498.5	595.5	23.8	33.3	290	
14"(350)	190	315.3	315	609.6	709.6	28.7	37	335	
16"(400)	216	362.8	335.3	421	742	41	48	388	
18"(450)	222	413.3	356.2	449	802	41	54	438	
20"(500)	229	454.9	377.1	467	842	41	60	480	
24"(600)	267	548.8	489.8	607	1161	51	70	580	
28"(700)	292	682	567	697	1279	60	83	720	
32"(800)	318	702	570	697	1307	60	89	740	
36"(900)	330	886	794	794	1432	60	102	886	
40"(1000)	410	972	940	1067	1731	80	120	1016	
48"(1200)	470	1168	1130	1130	1953	90	140	1173	
56"(1400)	530	1362	1238	1238	2143	100	152	1382	
60"(1500)	600	1490	1050	1391	2423	110	165	1468	
64"(1600)	600	1580	1150	1480	2530	110	165	1640	
72"(1800)	670	1778	1676	1676	2790	120	180	1850	
80"(2000)	760	1970	1860	1860	3148	120	180	2060	

以上资料仅供参考，具体参数以罗杰斯技术部规格书为标准

4300型双法兰蝶阀

Type 4300 Double Flange Butterfly Valve

2至40英寸ANSI 300级 GB PN25/PN40

2"~40"inches ANSI Class 300 GB PN25/PN40

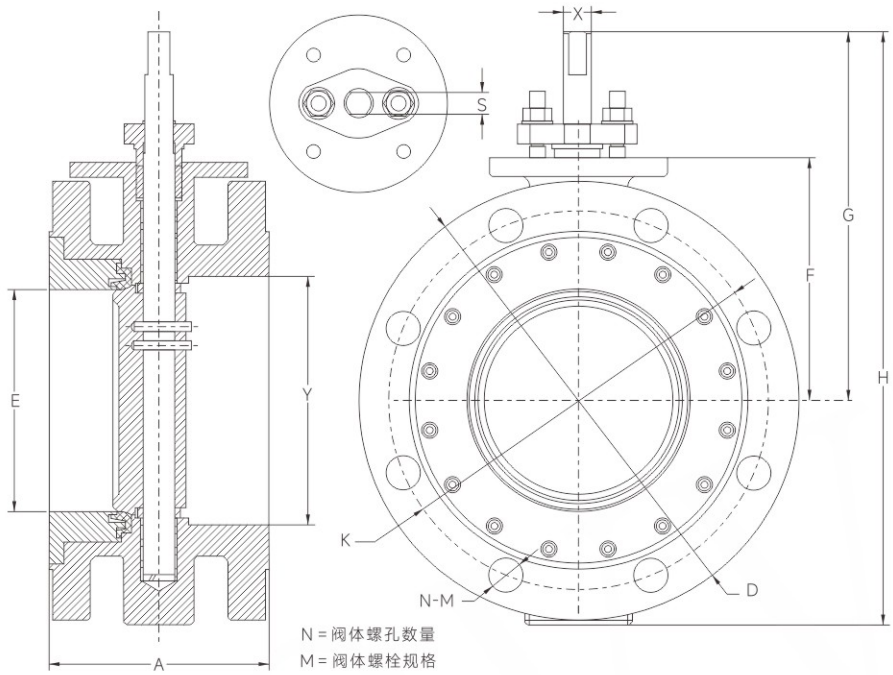

近似尺寸Approximate size(毫米mm)									
阀门尺寸 Inches (DN)	A	E	F	G	H	S 偏榫	X	Y	近似重量(公斤) Weight(kg)
2"(50)	150	48	80	124	186	7	10	58	
2-1/2"(65)	70	68	111	194	275	11.2	14.8	73	
3"(80)	180	73.1	120.7	203	316	11.2	14.8	84	
4"(100)	190	95.6	133.4	216	341	11.2	14.8	106	
5"(125)	200	111.4	134.9	217	362	11.2	14.8	124	
6"(150)	210	141.7	152.4	257	413	14	18	150	
8"(200)	230	188	187.3	306	495	15.9	21.9	196	
10"(250)	250	235.9	231.8	353	592	20.6	28	244	
12"(300)	270	281.5	260.4	389	675	23.8	33.3	299	
14"(350)	290	315.3	315	414	732	28.7	37	314	
16"(400)	310	362.8	335.3	440	787	41	60	363	
18"(450)	330	413.3	356.2	548	1062	51	70	414	
20"(500)	350	454.9	377.1	581	1124	60	89	455	
24"(600)	390	548.8	489.8	638	1245	70	102	549	
28"(700)	430	682.8	567.8	697	1279	80	120	700	
32"(800)	470	702	570	697	1307	80	120	740	
36"(900)	510	886	794	895	1432	100	140	924	
40"(1000)	550	972	940	1067	1731	100	140	998	

以上资料仅供参考，具体参数以罗杰斯技术部规格书为标准

8150型对夹式高平台蝶阀

Type 8150 Wafer Type High Platform Butterfly Valve

2至12英寸ANSI 150级 GB PN10/PN16

2"~12"inches ANSI Class 150 GB PN10/PN16

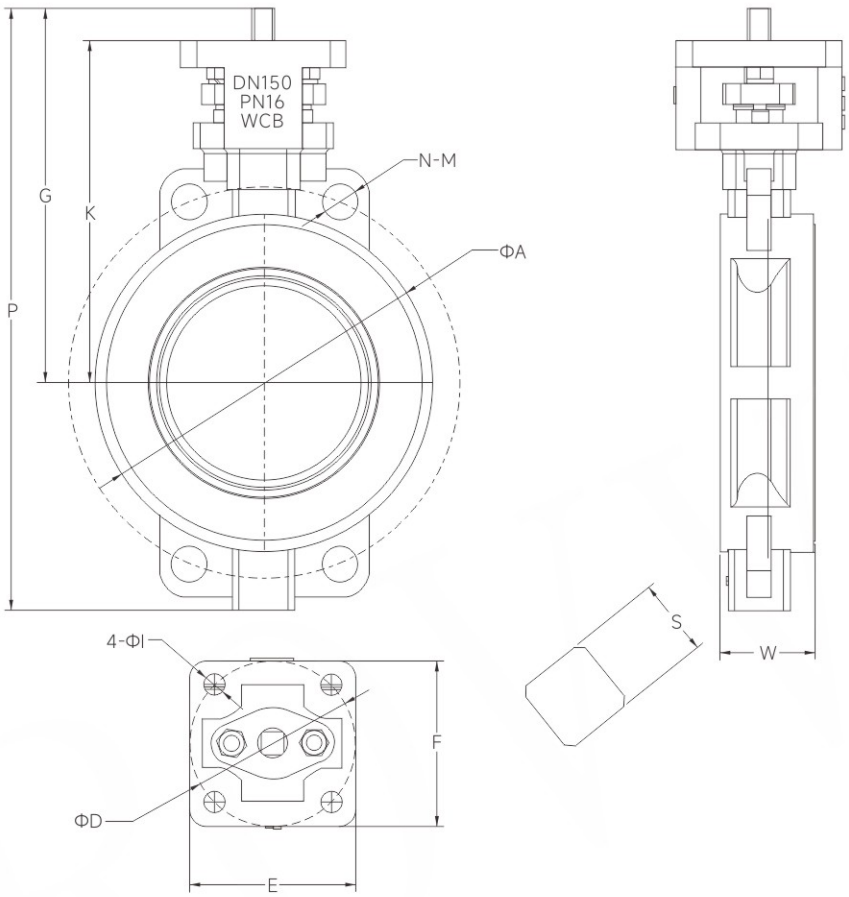

近似尺寸Approximate size(毫米mm)												
阀门尺寸 Inches (DN)	K	G	P	E	F	W	D	ΦI	S	N	MΦ	近似重量(公斤) Weight(kg)
2"(50)	100	112	182	55	55	43	50	6	9*9	4	19	4.2
2-1/2"(65)	120	134	225	70	70	49	70	8	11*11	4	19	5.3
3"(80)	125	139	242	70	70	49	70	8	11*11	4	19	6.2
4"(100)	140	154	272	70	70	54	70	8	11*11	8	19	7.8
5"(125)	156	170	303	70	70	57	70	8	11*11	8	22	9.5
6"(150)	172	188	342	102	102	57	102	10	14*14	8	22	13.2
8"(200)	202	221	406	102	102	64	102	10	17*17	8	22	21.6
10"(250)	242	266	472	120	120	71	125	12	22*22	12	26	36
12"(300)	273	302	543	120	120	81	125	12	27*27	12	26	53

以上资料仅供参考，具体参数以罗杰斯技术部规格书为标准

焊接端双偏心蝶阀

Welding End Double Eccentric Butterfly Valve

焊接端按 ANSI B16.25 a=37.5°
焊接端按 DIN 255P a=30°

ANSI 150磅级、300磅级 GB PN16/PN25/PN40

ANSI Class 150、300 GB PN16/PN25/PN40

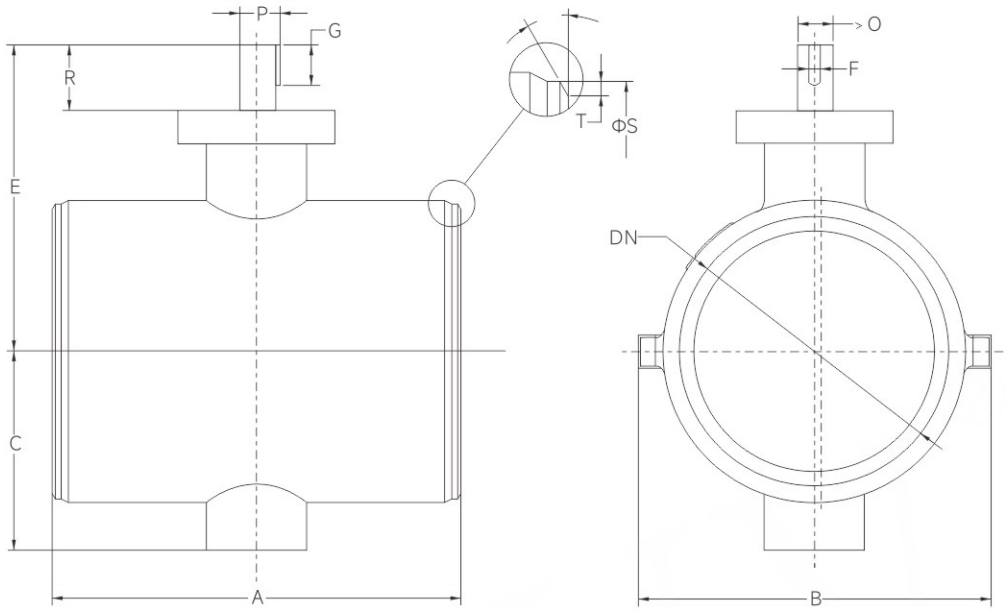

尺寸size(毫米mm)												
DN/D	A	B	C	E	F	G	ΦO	P	R	ΦS	T	重量(公斤) Weight(kg)
125/100	200	150	95	195	4.763	35	20	22.3	59	141	5.0(4.0-6.6)	16
150/125	210	180	108	208	4.763	35	20	22.3	59	168	5.0(4.0-8.0)	21
200/150	230	224	154	233	4.763	35	20	22.3	59	219	5.0(5.0-9.5)	27
250/200	250	277	279	279	6.350	49	25	27.9	65	273	5.6(5.2-11.1)	44
300/250	270	416	190	320	6.350	51	30	33.0	72	324	5.6(5.6-10.3)	65
350/300	290	446	223	368	9.525	58	35	39.3	84	356	5.6(5.6-9.5)	80
400/350	310	500	252	391	9.525	68	40	44.4	91	406	6.3(5.6-9.5)	115
450/400	330	570	284	459	12.7	80	45	50.6	110	457	6.3(6.4-9.5)	135
500/450	350	626	341	506	12.7	90	50	55.6	120	508	6.3(6.4-9.5)	190
600/500	390	662	350	551	12.7	90	55	60.8	122	610	8.0(6.4-12.7)	300
700/600	430	836	430	636	19.05	119	70	78.3	136	711	8.8(7.1-16.0)	400
750/700	450	900	553	680	22.23	106	85	94.8	114	762	8.8(7.1-9.5)	520
800/700	470	940	553	680	22.23	106	85	94.8	114	813	8.8(7.1-12.7)	590
850/750	490	995	578	705	22.23	106	85	94.8	114	864	10.0(7.1-14.0)	670
900/800	510	1045	609	762	22.23	116	95	105	126	914	10.0(7.9-16.0)	790
1000/900	550	1170	643	817	22.23	121	95	105	134	1016	11.0(7.9-16.0)	1000
1100/1000	630	1282	733	923	31.75	135	120	133.9	150	1118	11.9(8.7-14.3)	1300
1200/ 1000	630	1375	733	923	31.75	135	120	133.9	150	1219	11.9(10.3-17.5)	1500

以上资料仅供参考，具体参数以罗杰斯技术部规格书为标准

法兰技术资料
Flange Technical Data

150LB/PN16 2"-80"(DN50-DN2000)主要连接尺寸
Main connection size of dance 150LB/PN16 2"-80"(DN50-DN2000)

阀门规格 Valve specifications		美标法兰 150LB American Standard Flange 150LB				国标法兰 PN16 National standard flange PN16			
NPS	DN	D	K	N-Φ	N-M	D	K	N-Φ	N-M
2"	50	150	120.7	4-Φ19	4-M16	165	125	4-Φ18	4-M16
2-1/2"	65	180	139.7	4-Φ19	4-M16	185	145	4-Φ18	4-M16
3"	80	190	152.4	4-Φ19	4-M16	200	160	8-Φ18	8-M16
4"	100	230	190.5	8-Φ19	8-M16	220	180	8-Φ18	8-M16
5"	125	255	215.9	8-Φ22	8-M20	250	210	8-Φ18	8-M16
6"	150	280	241.3	8-Φ22	8-M20	285	240	8-Φ22	8-M20
8"	200	345	298.5	8-Φ22	8-M20	340	295	12-Φ22	12-M20
10"	250	405	362	12-Φ26	12-M24	405	355	12-Φ26	12-M24
12"	300	485	431.8	12-Φ26	12-M24	460	410	12-Φ26	12-M24
14"	350	535	476.3	12-Φ29	12-M27	520	470	16-Φ26	16-M24
16"	400	595	539.8	16-Φ29	12-M27	580	525	16-Φ30	16-M27
18"	450	635	577.9	16-Φ32	16-M30	640	585	20-Φ30	20-M27
20"	500	700	635	20-Φ32	20-M30	715	650	20-Φ34	20-M30
24"	600	815	749.3	20-Φ35	20-M33	840	770	20-Φ36	20-M33
28"	700	925	863.6	28-Φ35	28-M33	910	840	24-Φ36	24-M33
32"	800	1060	977.9	28-Φ42	28-M39	1025	950	24-Φ41	24-M36
36"	900	1170	1085.8	32-Φ42	32-M39	1125	1050	28-Φ41	28-M36
40"	1000	1290	1200.2	36-Φ42	36-M39	1255	1170	28-Φ42	28-M39
48"	1200	1510	1422.4	44-Φ42	44-M39	1485	1390	32-Φ48	32-M45
56"	1400	1745	1651	48-Φ48	48-M45	1685	1590	36-Φ48	36-M45
60"	1500	1855	1759	52-Φ48	52-M45	1820	1710	36-Φ56	36-M52
64"	1600					1930	1820	40-Φ58	40-M52
72"	1800					2130	2020	44-Φ55	44-M52
80"	2000					2345	2230	48-Φ60	48-M56

D表示:法兰外径 K表示:螺栓孔中心圆直径 N-Φ表示:螺栓数量和螺栓孔直径 N-M表示:螺栓数量和螺纹的规格

以上资料仅供参考，具体参数以罗杰斯技术部规格书为标准

法兰技术资料
Flange Technical Data

300LB/PN40 2"-60"(DN50-DN1500)主要连接尺寸
Main connection size of dance 300LB/PN40 2"-60"(DN50-DN1500)

阀门规格 Valve specifications		美标法兰 300LB American Standard Flange 300LB				国标法兰 PN40 National standard flange PN40			
NPS	DN	D	K	N-Φ	N-M	D	K	N-Φ	N-M
2"	50	165	127	8-Φ19	8-M16	165	125	4-Φ18	4-M16
2-1/2"	65	190	149.2	8-Φ19	8-M20	185	145	8-Φ18	8-M16
3"	80	210	168.3	8-Φ19	8-M20	200	160	8-Φ18	8-M16
4"	100	255	200	8-Φ19	8-M20	235	190	8-Φ22	8-M20
5"	125	280	235	8-Φ22	8-M20	270	220	8-Φ26	8-M24
6"	150	320	269.9	12-Φ22	12-M20	300	250	8-Φ26	8-M24
8"	200	380	330.2	12-Φ26	12-M24	375	320	12-Φ30	12-M27
10"	250	445	387.4	16-Φ29	16-M27	450	385	12-Φ33	12-M30
12"	300	520	450.8	16-Φ32	16-M30	515	450	16-Φ33	16-M30
14"	350	585	514.4	20-Φ32	20-M30	580	510	16-Φ36	16-M33
16"	400	650	571.5	20-Φ35	20-M33	660	585	16-Φ39	16-M36
18"	450	710	628.6	24-Φ35	24-M33	685	610	20-Φ39	20-M36
20"	500	775	685.8	24-Φ35	24-M33	755	670	20-Φ42	20-M39
24"	600	915	812.8	24-Φ42	24-M39	890	795	20-Φ48	20-M45
28"	700	1035	939.8	28-Φ45	28-M42	995	900	24-Φ48	24-M45
32"	800	1150	1054.1	28-Φ51	28-M48	1140	1030	24-Φ58	24-M52
36"	900	1270	1168.4	32-Φ55	32-M52	1250	1140	28-Φ56	28-M52
40"	1000	1240	1155.7	32-Φ45	32-M42	1360	1250	28-Φ56	28-M52
48"	1200	1465	1371.6	32-Φ51	32-M48				
56"	1400	1710	1600.2	28-Φ60	28-M56				
60"	1500	1810	1701.8	32-Φ60	32-M56				

D表示:法兰外径 K表示:螺栓孔中心圆直径 N-Φ表示:螺栓数量和螺栓孔直径 N-M表示:螺栓数量和螺纹的规格

以上资料仅供参考，具体参数以罗杰斯技术部规格书为标准

法兰技术资料
Flange Technical Data

600LB/PN100 2"-24"(DN50-DN600)主要连接尺寸
Main connection size of dance 600LB/PN100 2"-24"(DN50-DN600)

阀门规格 Valve specifications		美标法兰 600LB American Standard Flange 600LB				国标法兰 PN100 National standard flange PN100			
NPS	DN	D	K	N-Φ	N-M	D	K	N-Φ	N-M
2"	50	165	127	8-Φ18	8-M16	195	145	4-Φ26	4-M24
2-1/2"	65	190	149.2	8-Φ22	8-M20	220	170	8-Φ26	8-M24
3"	80	210	168.3	8-Φ22	8-M20	230	180	8-Φ26	8-M246
4"	100	275	215.9	8-Φ26	8-M24	265	210	8-Φ30	8-M27
5"	125	330	266.7	8-Φ30	8-M27	315	250	8-Φ33	8-M30
6"	150	355	292.1	12-Φ30	12-M27	355	290	12-Φ33	12-M30
8"	200	420	349.2	12-Φ33	12-M30	430	360	12-Φ36	12-M337
10"	250	510	431.8	16-Φ36	16-M33	505	430	12-Φ39	12-M36
12"	300	560	489	20-Φ36	20-M33	585	500	16-Φ42	16-M39
14"	350	605	527	20Φ39	20-M36	655	560	16-Φ48	16-M45
16"	400	685	603.2	20-Φ42	20-M39	715	620	16-Φ48	16-M45
18"	450	745	654	24-Φ45	24-M42	770	675	20-Φ58	20-M52
20"	500	815	723.9	24-Φ45	24-M42	870	760	20-Φ58	20-M52
24"	600	940	838.2	24-Φ51	24-M48	990	875	20-Φ62	20-M56

D表示:法兰外径 K表示:螺栓孔中心圆直径 N-Φ表示:螺栓数量和螺栓孔直径 N-M表示:螺栓数量和螺纹的规格

本样册所登载规格，设计与内容如产生更新，恕不另行通知

以上资料仅供参考，具体参数以罗杰斯技术部规格书为标准

维修包
Repair kit

进口气缸易损件之连杆总成
Repair kits & Spare parts for
pneumatic actuator-leverage part

进口气缸易损件之软密封密封圈
Repair kits & spare parts for
pneumaticactuator B1C/J soft sealing pack

进口替代蝶阀维修包，包含阀座、轴套、填料等易损件
Repair kits & Spare parts including
seat, bushing and packing.

进口替代气动配件易损件
Replacement of high-pressure oil
pipe and thread sleeve

12月质保期
12m warranty period

24小时技术热线
24h tech on–line

24小时现场服务
24h field service

24小时咨询答复
24h response

采用生态纸印刷

特别申明：本资料数据由本公司技术部负责解释，如有参数变更，恕不另行通知。

上海罗杰斯阀门有限公司

SHANGHAI ROGERS VALVE CO., LTD.

地址：上海市金山区山通路888号
电话：021-33758111
传真：021-33758119
网站：www.rovv-valve.com
邮箱：rovv@rovv-valve.com

微信公众号